DURAJACK are built tough with strict ISO 9001 manufacturing processes.
We also works hard to maintain the ISO 9001 quality rating, in its ongoing pursuit of excellence.

DURAJACK hydraulic cylinder complete with the criteria set forth in the American Society of Mechanical Engineers standards Institute ASME B30.1 :

1. Cylinder are designed to have minimum of a 2-to-1 safety factor on typical material yield strength;
   and/or
2. Cylinder design is
   A. operated through a minimum of 10 cycles of full travel at 110% of rated load, and
   B. Pressurized 3 times at 150% of pressure with the cylinder extended to approximately 90% of full stroke, after which the cylinder must be functional at rated load for full stroke and free of leaks.

Selection

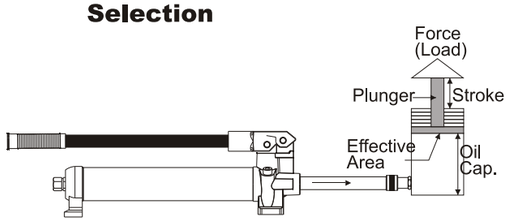

Require usable oil capacity =2 X oil capacity (Cyl. or tool)

Flow = is created by the pump

Pressure = is created by resistance to flow.
This resistance is usually the result of a load.

$$\text{Force (metric tons)} = \frac{\text{Cyl. Eff. Area } (cm^2) \times \text{Working pressure (Hydraulic Pump) } (bar/\ kgf/cm^2)}{1000kg}$$

$$\text{Extended Height (in)} = \text{Cyl. Stroke (in)} + \text{Cyl. Collapsed height (in)}$$

$$\text{Cyl. oil Cap. } (in^3) = \text{Cyl. Eff. Area } (in^2) \times \text{Cyl. Stroke (in)}$$

$$\text{Usable oil (system) } (in^3) = \text{Cyl. Oil Cap. } (in^3) \times \text{Quantity of Cyl. In system}$$

$$\text{Speed (Cyl. Plg.) (Sec/in)} = \frac{\text{Cyl. Eff. Area } (in^2)}{\text{Pump flow per minute } (in^3/min)} \times 60sec$$

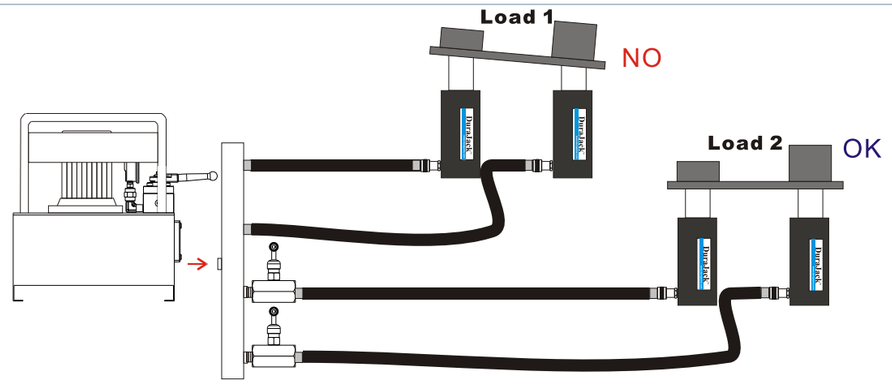

When more than one hydraulic cylinder is being used, each cylinder will lift at its own rate, depending on the force required to move the load at that point.

Cylinder with the lightest load will move first, and cylinders with the heaviest load will move last (Load 1), as long as the cylinders have the same capacity.

To have all cylinders operate uniformly so that the load is being lifted at the same rate at each point, either control valves or synchronous lift system components must be added to the system.

※Copyright 2012 DURAJACK Enterprise Co., Ltd All Rights Reserved.

80% Manufacturer's rating of load and stroke are maximum safe limits. Best using situation is 80% of these ratings!

Don't use cylinder without saddle. This will cause plunger to "mushroom". Saddle distribute load evenly on the plunger.

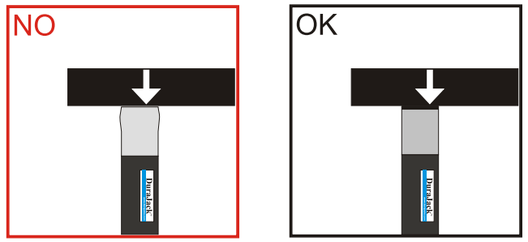

When making connections with quick couplers, make sure the couplings are fully engaged. Threaded connections such as fittings, gauges, etc. must be securely tightened and leak free. Never use excessive tightening force that may distort the fittings or strip the thread profile.

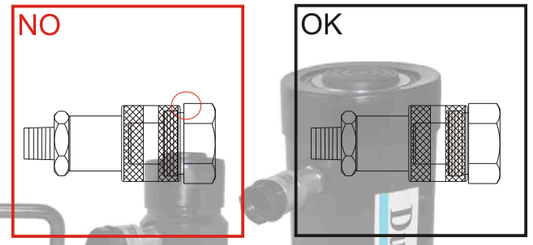

As with jacks, never place any part of your body under the load. Load must be on cribbing before venturing under.

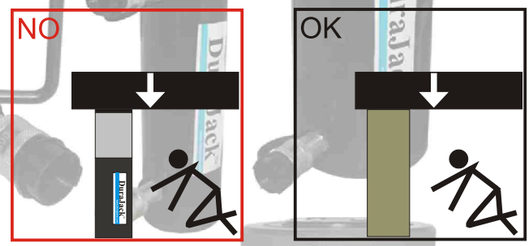

Place blocking or cribbing under the loads as you raise it. Each time you raise it higher, insert more blocking. Position yourself in a manner that will keep you clear of the load, and will not allow your hands or other body part between the load and the cribbing.

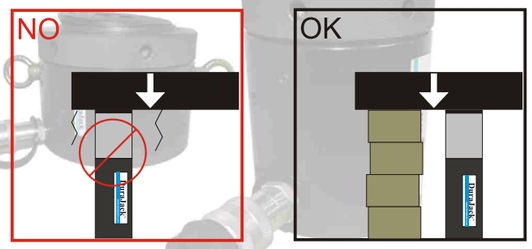

Weld splatter will damage plunger rods and hose. Hydraulic fluid can ignite if vaporized or exposed to high temperatures.

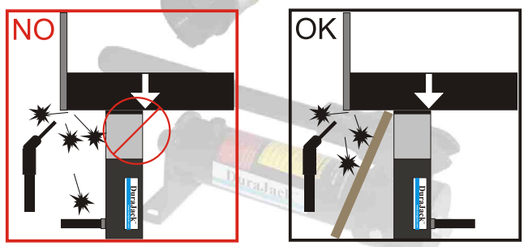

The load must be centered on the ram, or equally distributed on multiple rams. Off center loading can result in the ram slipping out and loss of the load.

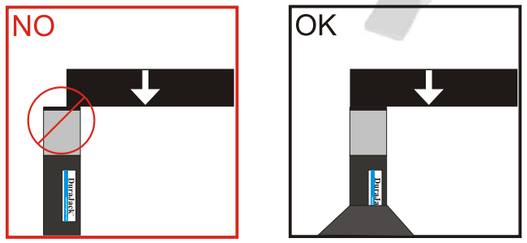

DS Series

Single-Acting

General Cylinder
Spring return

Capacity:
10-200 ton

Stroke:
25-150mm

Maximum Operating Pressure:
700 bar

DS Single-Acting, General Cylinders

- Designed for use in all positions.
- Hard chrome plated plunger and inner of barrel resists wear and corrosion, it also be more closed and extending cylinder life.
- Maximum sized springs speed piston return and increase spring life.
- Plunger wiper reduces contaminant.
- Stop ring for piston blow-out protection.
- Powder coat finish for increased corrosion resistance and antirust.
- DQC-3/8UF coupler and dust cap are included on all models.

DS10-50

DS20-50

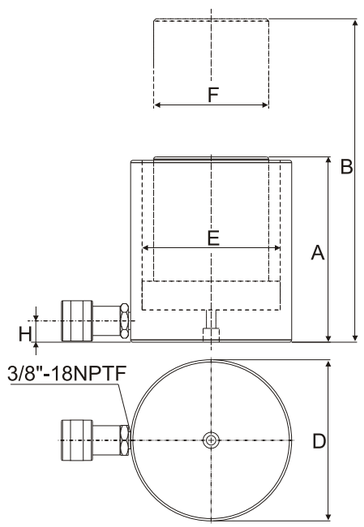

DS10-25, & DS10-50,
DS20-25, DS20-50,
DS30-25, DS30-50,
DS50-25, DS50-50
DS100-25

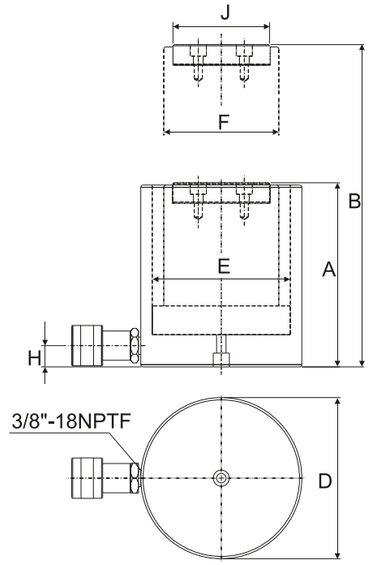

DS10-75~DS10-150
DS20-75~DS20-150
DS30-75~DS30-150
DS50-75~DS50-150
DS100-50~DS100-150
DS150-50~DS150-150
DS200-50~DS200-150

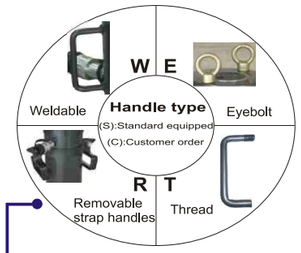

Handle type (C)	Handle type (S)	Model Number	Cylinder Capacity ton (kN)	Stroke (mm)	Effective Area (cm^2)	Oil Capacity (cm^3)	Close Height A (mm)	Extended Height B (mm)	Outside Diam. D (mm)	Cylinder Bore Diam. E (mm)	Plunger Diam. F (mm)	Base to Adv. Port H (mm)	Saddle Diam. J (mm)	Wt. (kg)
		DS10-25	10 (101)	25.0	14.46	36.1	80.0	105.0	70.0	42.93	38.1	19.5	—	2.4
		DS10-50		50.0	14.46	72.3	130.0	180.0	57.0	42.93	38.1	19.5	—	2.5
		DS10-75		75.0	14.46	108.4	155.0	230.0	57.0	42.93	38.1	19.5	35	3.1
		DS10-100		100.0	14.46	144.6	180.0	280.0	57.0	42.93	38.1	19.5	35	3.4
		DS10-125		125.0	14.46	180.7	205.0	330.0	57.0	42.93	38.1	19.5	35	4.0
		DS10-150		150.0	14.46	216.9	230.0	380.0	57.0	42.93	38.1	19.5	35	4.2
		DS20-25	20 (198)	25.0	28.26	70.7	80.0	105.0	90.0	60.00	50.00	17.0	—	3.7
	W	**DS20-50**		50.0	28.26	141.3	135.0	185.0	79.0	60.00	50.00	22.0	—	4.9
	W	**DS20-75**		75.0	28.26	212.0	160.0	235.0	79.0	60.00	50.00	22.0	40	5.6
	W	**DS20-100**		100.0	28.26	282.6	185.0	285.0	79.0	60.00	50.00	22.0	40	6.3
	W	**DS20-125**		125.0	28.26	353.3	210.0	335.0	79.0	60.00	50.00	22.0	40	7.0
	W	**DS20-150**		150.0	28.26	423.9	235.0	385.0	79.0	60.00	50.00	22.0	40	7.7
		DS30-25	30 (294)	25.0	42.00	105.0	85.0	110.0	99.0	73.15	57.15	18.0	—	5.0
	W	**DS30-50**		50.0	42.00	210.0	145.0	195.0	99.0	73.15	57.15	22.5	—	7.6
	W	**DS30-75**		75.0	42.00	315.0	170.0	245.0	99.0	73.15	57.15	22.5	49.5	7.8
	W	**DS30-100**		100.0	42.00	420.0	195.0	295.0	99.0	73.15	57.15	22.5	49.5	8.9
	W	**DS30-125**		125.0	42.00	525.0	220.0	345.0	99.0	73.15	57.15	22.5	49.5	10.0
	W	**DS30-150**		150.0	42.00	630.0	245.0	395.0	99.0	73.15	57.15	22.5	49.5	11.0
	W	**DS50-25**	50 (498)	25.0	71.21	178.0	95.0	120.0	127.0	95.25	79.50	24.0	—	8.8
	W	**DS50-50**		50.0	71.21	356.0	120.0	170.0	127.0	95.25	79.50	24.0	—	10.5
	W	**DS50-75**		75.0	71.21	534.0	190.0	265.0	127.0	95.25	79.50	32.0	70	16.8
	W	**DS50-100**		100.0	71.21	712.0	215.0	315.0	127.0	95.25	79.50	32.0	70	18.2
	W	**DS50-125**		125.0	71.21	890.1	240.0	365.0	127.0	95.25	79.50	32.0	70	19.9
	W	**DS50-150**		150.0	71.21	1068.1	265.0	415.0	127.0	95.25	79.50	32.0	70	21.4
R	W	**DS100-25**	100 (933)	25.0	133.27	333.1	100.0	125.0	177.0	130.30	104.90	20.0	—	16.9
R	W	**DS100-50**		50.0	133.27	666.3	160.0	210.0	177.0	130.30	104.90	30.0	84	26.8
R	W	**DS100-100**		100.0	133.27	1332.7	204.0	304.0	177.0	130.30	104.90	30.0	84	36.8
R	W	**DS100-125**		125.0	133.27	1665.8	235.0	360.0	177.0	130.30	104.90	30.0	84	40.6
R	W	**DS100-150**		150.0	133.27	1999.0	260.0	410.0	177.0	130.30	104.90	30.0	84	44.3
R	E	**DS150-50**	150 (1407)	50.0	200.96	1004.8	200.0	250.0	215.0	160.00	115.00	50.0	99	50.2
R	E	**DS150-100**		100.0	200.96	2009.6	250.0	350.0	215.0	160.00	115.00	50.0	99	60.0
R	E	**DS150-150**		150.0	200.96	3014.4	300.0	450.0	215.0	160.00	115.00	50.0	99	68.9
R	E	**DS200-50**	200 (1984)	50.0	283.38	1416.9	200.0	250.0	255.0	190.00	135.00	50.0	115	71.6
R	E	**DS200-100**		100.0	283.38	2833.0	250.0	350.0	255.0	190.00	135.00	50.0	115	85.0
R	E	**DS200-150**		150.0	283.38	4250.7	300.0	450.0	255.0	190.00	135.00	50.0	115	98.5

DAC Series

Single-Acting

Aluminum Cylinder
Spring return

Capacity:
20-150 ton

Stroke:
50-200 mm

Maximum Operating Pressure:
700 bar

DAC-304

DAC-504

DAC Single-Acting, Aluminum Cylinders

- Lightweight, aluminum design for maximum portability.
- 7075-T6 Aluminum alloy components for maximum strength and minimum weight.
- Steel baseplate and saddle for protection against load-induced damage.
- Anodizing treatment plunger, surfaces and inner of barrel resists damage and extends cylinder life.
- Maximum sized springs speed piston return and increase spring life.
- Composite bearings prevent metal-to-metal contact,increasing cylinder life and resistance to side-load.
- Stop ring for piston blow-out protection.
- DQC-3/8UF coupler and dust cap are included on all models.

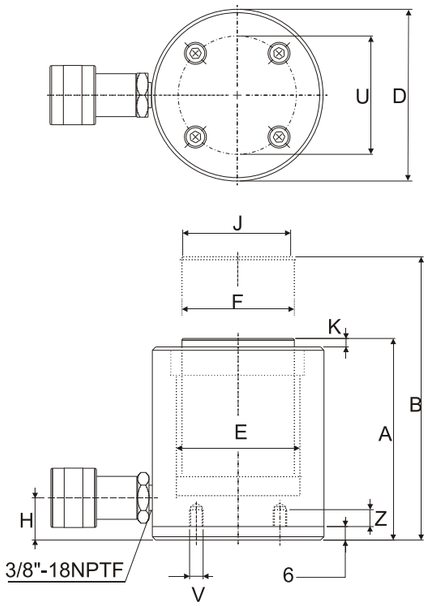

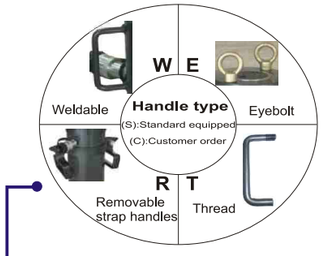

Handle type (S)	Model Number
	DAC-202
T	DAC-204
T	DAC-206
T	DAC-302
T	DAC-304
T	DAC-306
T	DAC-502
T	DAC-504
T	DAC-506
T	DAC-1004
T	DAC-1006
T	DAC-1008
T	DAC-1506

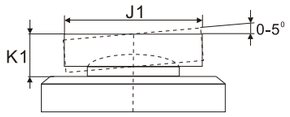

Optional Bolt Tilt Saddle Dimensions (mm)

Cylinder Model/Cap. (ton)	Model Number	Saddle Diameter J1	Saddle Protrusion from Base K1
DAC-50	DXKCATRAC-50	50.0	25.9
DAC-100	DXKCATRAC-100	91.2	33.0
DAC-150	DXKCATRAC-150	118.1	37.0

Saddle

All DAC-Series are equipped with removable saddles of hardened steel.

Cylinder Capacity ton (kN)	Stroke (mm)	Cylinder Effective Area (cm^2)	Oil Capacity (cm^3)	Collapsed Height A (mm)	Extended Height B (mm)	Outside Diam. D (mm)	Cylinder Bore Diam. E (mm)	Plunger Diam. F (mm)	Base to Adv. Port H (mm)	Saddle Diam. J (mm)	Saddle Protrusion from Plngr. K (mm)	Weight (kg)
20 (218)	50	31.2	156	174	224	85	63	50	27	40	3	3.6
	100	31.2	312	224	324	85	63	50	27	40	3	4.1
	150	31.2	468	274	424	85	63	50	27	40	3	4.6
30 (309)	50	44.2	221	181	231	100	75	60	33	40	3	4.5
	100	44.2	442	231	331	100	75	60	33	40	3	5.2
	150	44.2	663	281	431	100	75	60	33	40	3	5.9
50 (496)	50	70.9	354	186	236	130	95	80	30	50	3	8.5
	100	70.9	709	236	336	130	95	80	30	50	3	9.8
	150	70.9	1063	286	436	130	95	80	30	50	3	11.1
100 (1002)	100	143.1	1431	271	371	188	135	110	46	94	3	19.6
	150	143.1	2147	321	471	188	135	110	46	94	3	21.9
	200	143.1	2863	371	571	188	135	110	46	94	3	24.2
150 (1589)	150	227.0	3405	343	493	230	170	140	51	113	3	33.3

Aluminum vs. Steel

Aluminum different from steel in that it has a lower finite fatigue life. This means aluminum cylinders should not be used in high-cycle applications such as production.
The **DURAJACK** line of aluminum cylinders are designed to provide 5,000 cycles at their recommended pressure. This limit should not be exceeded. In normal lifting and many maintenance applications, this should provide a lifetime of use.

Steel Base Plate

- The steel base plate protects the cylinder base from damage, it should not be removed.
- Do not use the base holes in these aluminum cylinders to attach any device to the cylinder.

Steel Base Plate Mounting Holes

Cylinder Model/ Capacity (ton)	Bolt Circle U (mm)	Thread V (mm)	Thread Depth Z (mm)
DAC-20	70.0	M6	12
DAC-30	80.0	M6	12
DAC-50	110.0	M6	12
DAC-100	160.0	M6	12
DAC-150	200.0	M6	12

*Including Base Plate Height of 6mm.
*4 base plate bolts:M6X1.0X0.24

DLP Series

Single-Acting

Pancake Lock Nut Cylinder
Load return

Capacity:
60-520 ton

Stroke:
45-50 mm

Maximum Operating Pressure:
700 bar

DLP Single-Acting, Pancake Lock Nut Cylinders

- Flat design for use in confined area.
- Special coating on piston and stop ring improves corrosion and abrasion resistance.
- Safety lock nut for mechanical load holding.
- Integral tilt saddle standard improves performance under side load.
- Overflow port functions as a stroke limiter.
- Single-acting load return.
- Powder coat finish for increased corrosion resistance and antirust.
- DQB-3/8UF coupler and dust cap are included on all models.

DLP-1002

DLP-602

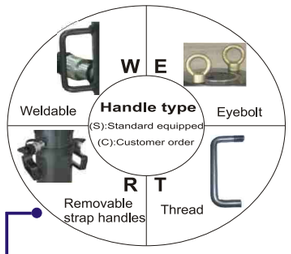

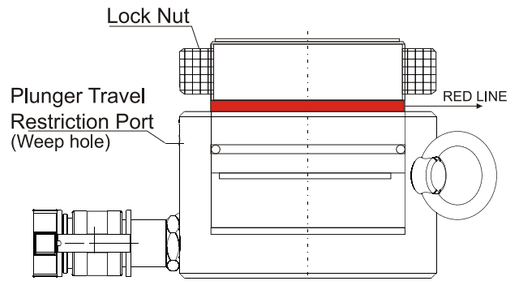

Plunger show at maximum extension

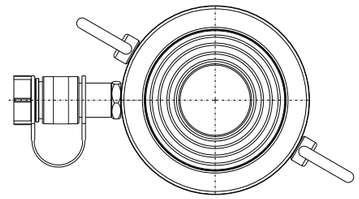

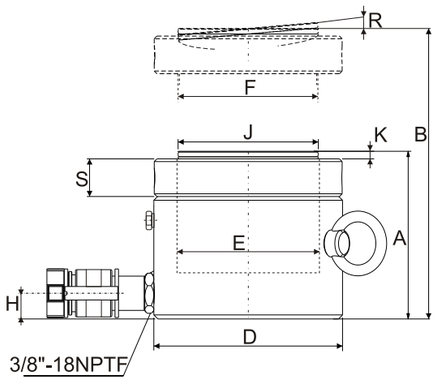

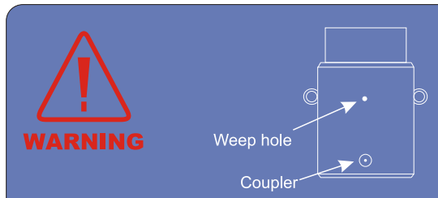

Apply to Single-acting, High tonnage cylinder DLP, DLL and DLS series

When stroke limit is reached; overflow port ("weep hole") spurt oil to prevents piston from being overextended.

Saddle

All DLP-Series include integral tilt saddles with maximum tilt angles up to 5°.

Control Valve

Fitting needle valve such as DV-82 is used to control cylinder speed during lifting and lowering. (See DV-Series)

Handle type (S)	Model Number	Cylinder Capacity ton (kN)	Stroke (mm)	Cylinder Effective Area (cm^2)	Oil Capacity (cm^3)	Collapsed Height A (mm)	Extended Height B (mm)
E	DLP-602	60 (606)	50	86.6	432	125	175
E	DLP-1002	100 (1027)	50	146.8	734	137	187
E	DLP-1602	160 (1619)	45	231.3	1040	148	193
E	DLP-2002	200 (1999)	45	285.6	1285	155	200
E	DLP-2502	260 (2567)	45	366.8	1650	159	204
E	DLP-4002	400 (3916)	45	559.5	2517	178	223
E	DLP-5002	520 (5114)	45	730.6	3287	192	237

Outside Diameter D (mm)	Cyl. Bore Diameter E (mm)	Plunger Diameter F (mm)	Base to Advance Port H (mm)	Saddle Diameter J (mm)	Saddle Protrusion from Plngr. K (mm)	Saddle Max. Tilt Angle R	Lock Nut Height S (mm)	Weight (kg)
140	105.0	Tr104X4	19	96	6	5°	28	15
175	136.7	Tr136X6	21	126	8	5°	31	26
220	171.6	Tr171X6	27	160	9	5°	40	44
245	190.7	Tr190X6	30	180	10	5°	43	57
275	216.1	Tr216X6	32	200	11	5°	44	74
350	266.9	Tr266X6	39	250	11	4°	55	134
400	305.0	Tr305X6	48	290	10	3°	62	189

DC Series

Single-Acting

Collar threads Cylinder
Spring return

Capacity:
5-100 ton

Stroke:
16-362mm

Maximum Operating Pressure:
700 bar

DC Single-Acting, Collar threads Cylinders

- Collar threads, plunger threads and base mounting holes enable easy fixturing (see page 12)
- Hard chrome plated plunger and inner of barrel resists wear and corrosion.
- Maximum sized springs speed piston return and increase spring life.
- Plunger wiper reduces contaminant.
- Stop ring for piston blow-out protection.
- Powder coat finish for increased corrosion resistance and antirust.
- All collar threads have a cap for protection.
- DQC-3/8UF coupler and dust cap are included on all models.

Saddle

DC-Series are equipped with hardened removable grooved saddles.
For tilt saddle to fit.

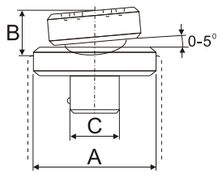

DXKCAT-10,50

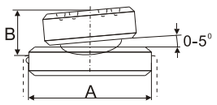

DXKCAT-100

Optional Saddle Dimensions (mm)

Cylinder Model/Cap. (ton)	Model Number Type : Tilt	A	B	C
DC-10 , DC-15 Except DC-101	**DXKCAT-10**	35	15	22
DC-25 , DC-30	**DXKCAT-50**	50	23	35
DC-50 , DC-75 DC-100	**DXKCAT-100**	71	24	-

DC-152

Hydraulic Cylinder and Pump Sets

Basic system set-up include cylinder, male/female coupler, hose, pressure gauge,gauge accessories and pump.
Please connect DURAJACK office nearest to you for advice and technical assistance in the layout of your ideal.

Think Safety

- Manufacturer's rating of load and stroke are maximum safe limits.
- Good practice encourages using only 80% of these ratings!

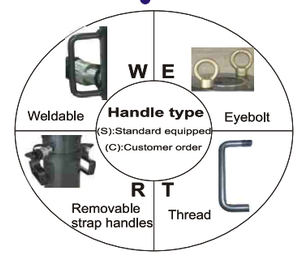

QUICK SELECTION CHART

Handle type (C)	Handle type (S)	Model Number	Cylinder Capacity ton (kN)	Stroke (mm)	Cylinder Effective Area (cm^2)	Oil Capacity (cm^3)	Collapsed Height A (mm)	Plunger internal Thread O (in)	Weight (kg)
		DC-50	5 (45)	16	6.5	10	41	* *	1.0
		DC-51		25	6.5	16	110	3/4"-16	1.0
		DC-53		76	6.5	50	165	3/4"-16	1.5
		DC-55		127	6.5	83	215	3/4"-16	1.9
		DC-57		177	6.5	115	273	3/4"-16	2.4
		DC-59		232	6.5	151	323	3/4"-16	2.8
		DC-101	10 (101)	26	14.5	38	89	#10-24UN	1.8
		DC-102		54	14.5	78	121	1"-8	2.3
		DC-104		105	14.5	152	171	1"-8	3.3
		DC-106		156	14.5	226	247	1"-8	4.4
		DC-108		203	14.5	294	298	1"-8	5.4
		DC-1010		257	14.5	373	349	1"-8	6.4
		DC-1012		304	14.5	441	400	1"-8	6.8
		DC-1014		356	14.5	516	450	1"-8	8.2
		DC-151	15 (142)	25	20.3	51	124	1"-8	3.3
		DC-152		51	20.3	104	149	1"-8	4.1
		DC-154		101	20.3	205	200	1"-8	5.0
		DC-156		152	20.3	308	271	1"-8	6.8
		DC-158		203	20.3	411	322	1"-8	8.2
		DC-1510		254	20.3	516	373	1"-8	9.5
		DC-1512		305	20.3	619	423	1"-8	10.9
		DC-1514		356	20.3	723	474	1"-8	11.8
		DC-251	25 (232)	26	33.2	86	139	1 1/2"-16	5.9
		DC-252		50	33.2	166	165	1 1/2"-16	6.4
		DC-254		102	33.2	339	215	1 1/2"-16	8.2
		DC-256		158	33.2	525	273	1 1/2"-16	10.0
		DC-258		210	33.2	697	323	1 1/2"-16	12.2
		DC-2510		261	33.2	867	374	1 1/2"-16	14.1
		DC-2512		311	33.2	1033	425	1 1/2"-16	16.3
		DC-2514		362	33.2	1202	476	1 1/2"-16	17.7
		DC-308	30(295)	209	42.1	880	387	—	18.1
		DC-502	50 (498)	51	71.2	362	176	—	15.0
	T	**DC-504**		101	71.2	719	227	—	19.1
	T	**DC-506**		159	71.2	1131	282	—	23.1
	R	**DC-5013**		337	71.2	2399	460	—	37.6
	R	**DC-756**	75 (718)	156	102.6	1601	285	—	29.5
	R	**DC-7513**		333	102.6	3417	492	—	59.0
R	W	**DC-1004**	100 (933)	102	133.3	1355	204	—	33.1
R	E	**DC-1006**		168	133.3	2239	357	—	59.0
R	E	**DC-1008**		203	133.3	2709	357	—	59.0
R	E	**DC-10010**		260	133.3	3466	449	—	72.6

* DC-50 cylinder has non-removable grooved saddle and no collar thread.

Model Number	Cylinder Capacity ton(kN)	Stroke (mm)	Cylinder Effective Area (cm^2)	Oil Capacity (cm^3)	Collapsed Height A (mm)	Extended Height B (mm)	Outside Diam. D (mm)	Cyl. Bore Diam. E (mm)	Plunger Diam. F (mm)	Base to Adv. Port H (mm)	Saddle Diam. J (mm)	Saddle Protrusion from Plngr. K (mm)
DC-50	5 (45)	16	6.5	10	41	57	58	28.7	25.4	19	*	*
DC-51		25	6.5	16	110	135	38	28.7	25.4	19	25	6
DC-53		76	6.5	50	165	241	38	28.7	25.4	19	25	6
DC-55		127	6.5	83	215	342	38	28.7	25.4	19	25	6
DC-57		177	6.5	115	273	450	38	28.7	25.4	19	25	6
DC-59		232	6.5	151	323	555	38	28.7	25.4	19	25	6
DC-101	10 (101)	26	14.5	38	89	115	57	42.9	38.1	19	—	—
DC-102		54	14.5	78	121	175	57	42.9	38.1	19	35	6
DC-104		105	14.5	152	171	276	57	42.9	38.1	19	35	6
DC-106		156	14.5	226	247	403	57	42.9	38.1	19	35	6
DC-108		203	14.5	294	298	501	57	42.9	38.1	19	35	6
DC-1010		257	14.5	373	349	606	57	42.9	38.1	19	35	6
DC-1012		304	14.5	441	400	704	57	42.9	38.1	19	35	6
DC-1014		356	14.5	516	450	806	57	42.9	38.1	19	35	6
DC-151	15 (142)	25	20.3	51	124	149	69	50.8	41.4	19	38	9
DC-152		51	20.3	104	149	200	69	50.8	41.4	19	38	9
DC-154		101	20.3	205	200	301	69	50.8	41.4	19	38	9
DC-156		152	20.3	308	271	423	69	50.8	41.4	25	38	9
DC-158		203	20.3	411	322	525	69	50.8	41.4	25	38	9
DC-1510		254	20.3	516	373	627	69	50.8	41.4	25	38	9
DC-1512		305	20.3	619	423	728	69	50.8	41.4	25	38	9
DC-1514		356	20.3	723	474	830	69	50.8	41.4	25	38	9
DC-251	25 (232)	26	33.2	86	139	165	85	65.0	57.2	25	50	10
DC-252		50	33.2	166	165	215	85	65.0	57.2	25	50	10
DC-254		102	33.2	339	215	317	85	65.0	57.2	25	50	10
DC-256		158	33.2	525	273	431	85	65.0	57.2	25	50	10
DC-258		210	33.2	697	323	533	85	65.0	57.2	25	50	10
DC-2510		261	33.2	867	374	635	85	65.0	57.2	25	50	10
DC-2512		311	33.2	1033	425	736	85	65.0	57.2	25	50	10
DC-2514		362	33.2	1202	476	838	85	65.0	57.2	25	50	10
DC-308	30(295)	209	42.1	880	387	596	101	73.2	57.2	57	50	10
DC-502	50 (498)	51	71.2	362	176	227	127	95.2	79.5	33	71	2
DC-504		101	71.2	719	227	328	127	95.2	79.5	33	71	2
DC-506		159	71.2	1131	282	441	127	95.2	79.5	35	71	2
DC-5013		337	71.2	2399	460	797	127	95.2	79.5	35	71	2
DC-756	75 (718)	156	102.6	1601	285	441	146	114.3	95.2	30	71	5
DC-7513		333	102.6	3417	492	825	146	114.3	95.2	30	71	5
DC-1004	100 (933)	102	133.3	1355	204	306	177	130.3	104.9	41	71	2
DC-1006		168	133.3	2239	357	525	177	130.3	104.9	41	71	2
DC-1008		203	133.3	2709	357	576	177	130.3	104.9	41	71	2
DC-10010		260	133.3	3466	449	709	177	130.3	104.9	41	71	2

*DC-50 cylinder has non-removable grooved saddle and no collar thread.

**D1=41mm ; L=20mm ; M=25mm

Plunger Internal Thread O (in)	Plunger Thread Length P (mm)	Base Mounting Holes: Bolt Circle U (mm)	Base Mounting Holes: Thread V (in)	Base Mounting Holes: Thread Depth Z (mm)	Collar Thread W (in)	Collar Thread Length X (mm)	Wt. (kg)	Model Number
* *	*	28	5.6mm	—	—	—	1.0	DC-50
3/4"-16	14	25	1/4"-20UN	14	1 1/2"-16	28	1.0	DC-51
3/4"-16	14	25	1/4"-20UN	14	1 1/2"-16	28	1.5	DC-53
3/4"-16	14	25	1/4"-20UN	14	1 1/2"-16	28	1.9	DC-55
3/4"-16	16	25	1/4"-20UN	14	1 1/2"-16	28	2.4	DC-57
3/4"-16	16	25	1/4"-20UN	14	1 1/2"-16	28	2.8	DC-59
#10-24UN	6	39	5/16"-18UN	12	2 1/4"-14	26	1.8	DC-101
1"-8	19	39	5/16"-18UN	12	2 1/4"-14	26	2.3	DC-102
1"-8	19	39	5/16"-18UN	12	2 1/4"-14	26	3.3	DC-104
1"-8	19	39	5/16"-18UN	12	2 1/4"-14	26	4.4	DC-106
1"-8	19	39	5/16"-18UN	12	2 1/4"-14	26	5.4	DC-108
1"-8	19	39	5/16"-18UN	12	2 1/4"-14	26	6.4	DC-1010
1"-8	19	39	5/16"-18UN	12	2 1/4"-14	26	6.8	DC-1012
1"-8	19	39	5/16"-18UN	12	2 1/4"-14	26	8.2	DC-1014
1"-8	25	47	3/8"-16UN	12	2 3/4"-16	30	3.3	DC-151
1"-8	25	47	3/8"-16UN	12	2 3/4"-16	30	4.1	DC-152
1"-8	25	47	3/8"-16UN	12	2 3/4"-16	30	5.0	DC-154
1"-8	25	47	3/8"-16UN	12	2 3/4"-16	30	6.8	DC-156
1"-8	25	47	3/8"-16UN	12	2 3/4"-16	30	8.2	DC-158
1"-8	25	47	3/8"-16UN	12	2 3/4"-16	30	9.5	DC-1510
1"-8	25	47	3/8"-16UN	12	2 3/4"-16	30	10.9	DC-1512
1"-8	25	47	3/8"-16UN	12	2 3/4"-16	30	11.8	DC-1514
1 1/2"-16	25	58	1/2"-13UN	19	3 5/16"-12	49	5.9	DC-251
1 1/2"-16	25	58	1/2"-13UN	19	3 5/16"-12	49	6.4	DC-252
1 1/2"-16	25	58	1/2"-13UN	19	3 5/16"-12	49	8.2	DC-254
1 1/2"-16	25	58	1/2"-13UN	19	3 5/16"-12	49	10.0	DC-256
1 1/2"-16	25	58	1/2"-13UN	19	3 5/16"-12	49	12.2	DC-258
1 1/2"-16	25	58	1/2"-13UN	19	3 5/16"-12	49	14.1	DC-2510
1 1/2"-16	25	58	1/2"-13UN	19	3 5/16"-12	49	16.3	DC-2512
1 1/2"-16	25	58	1/2"-13UN	19	3 5/16"-12	49	17.7	DC-2514
1 1/2"-16	25	—	—	—	3 5/16"-12	49	18.1	DC-308
—	—	95	1/2"-13UN	19	5"-12	55	15.0	DC-502
—	—	95	1/2"-13UN	19	5"-12	55	19.1	DC-504
—	—	95	1/2"-13UN	19	5"-12	55	23.1	DC-506
—	—	95	1/2"-13UN	19	5"-12	55	37.6	DC-5013
—	—	—	—	—	5 3/4"-12	44	29.5	DC-756
—	—	—	—	—	5 3/4"-12	44	59.0	DC-7513
—	—	—	—	—	6 7/8"-12	44	33.1	DC-1004
—	—	139	3/4"-10UN	25	6 7/8"-12	44	59.0	DC-1006
—	—	139	3/4"-10UN	25	6 7/8"-12	44	59.0	DC-1008
—	—	139	3/4"-10UN	25	6 7/8"-12	44	72.6	DC-10010

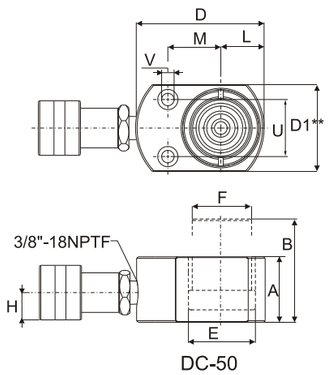

DC-50

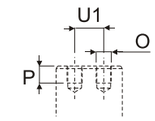

DC-101 only U1=19mm

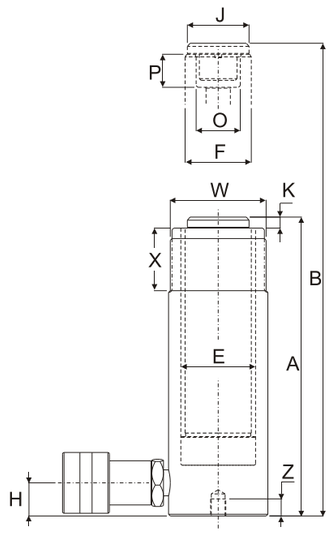

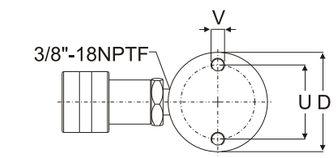

DC-51 to DC-5013 models
(see page12)

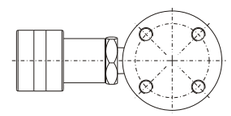
DC-1006 and DC-10010 models

DH Series

Single-Acting

Hollow Plunger Cylinder
Spring return

Capacity:
13-95 ton

Stroke:
8-155 mm

Center Hole Diameter:
19.6-79.0 mm

Maximum Operating Pressure:
700 bar

DH Single-Acting, Hollow Plunger Cylinders

- Hollow plunger design allows for both pull and push forces.
- Low profile and longer strokes fit in the tightest space.
- Withstands full "dead-end" loads.
- Collar threads for easy fixturing and all collar threads have a cap for protection.
- Special center tube protect plunger and inner of cylinder increases product life.
- Hard chrome plated plunger and inner of barrel resists wear and corrosion.
- Spring returing.
- Wiper rings protect the piston,bore & tube from contamination.
- Stop ring for piston blow-out protection.
- Powder coat finish for increased corrosion resistance and antirust.
- DQC-3/8UF coupler and dust cap are included on all models.

DH-123

DH-120

DH-120 includes DQB-3/8UF coupler and has 1/4 NPTF port.

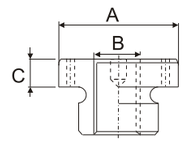

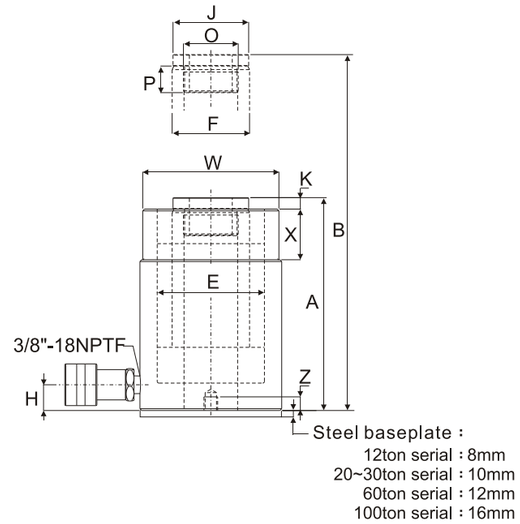

Optional Heat Treated Hollow Saddles

Cylinder Model/Cap. (ton)	Model No.	Saddle Dimensions A (mm)	B (in)	C (mm)
DH-202,206	**DXKHCH-20**	53	1"-8	9
DH-302,306	**DXKHCH-30**	63	1-1/4"-7	9
DH-603,606	**DXKHCH-60**	91	1-5/8"-5-1/2	12
DH-1003	**DXKHCH-100**	126	2-1/2"-8	13

※Smooth hollow saddles are standard on all DH series.
(12ton models are not equipped with saddles.)

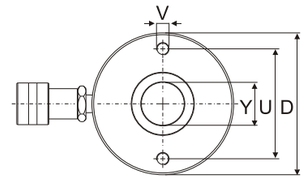

This drawing show the base mounting holes of barrel before setting steel base plate.

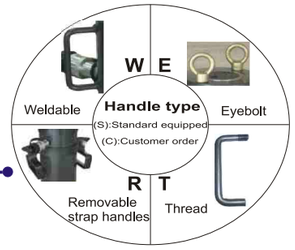

Handle type (S)	Model Number	Cylinder Capacity ton(kN)	Stroke (mm)	Cylinder Effective Area (cm^2)	Oil Cap. (cm^3)	Collapsed Height A (mm)	Ext. Height B (mm)	Out. Diam. D (mm)	Cylinder Bore Diam. E (mm)	Plngr. Diam. F (mm)
	DH-120	13(125)	8	17.9	14	55	63	69	54.1	35.1
	DH-121		42	17.9	75	120	162	69	54.1	35.1
	DH-1211		42	17.9	75	120	162	69	54.1	35.1
	DH-123		76	17.9	136	184	260	69	54.1	35.1
W	**DH-202**	20(215)	49	30.7	150	162	211	98	73.1	54.1
W	**DH-204**		102	30.7	311	242	344	98	73.1	54.1
W	**DH-206**		155	30.7	476	306	461	98	73.1	54.1
W	**DH-302**	30(326)	64	46.6	298	178	242	114	88.9	63.5
W	**DH-304**		102	46.6	473	233	335	114	88.9	63.5
W	**DH-306**		155	46.6	722	330	485	114	88.9	63.5
R	**DH-603**	60(576)	76	82.3	626	247	323	159	123.9	91.9
R	**DH-606**		153	82.3	1259	323	476	159	123.9	91.9
R	**DH-1003**	95(931)	76	133.0	1011	254	330	212	165.1	127.0

Cyl. Base to Advance Port H (mm)	Saddle Diam. J (mm)	Saddle Protr. from Plngr. K (mm)	Plunger Internal Thread O (in)	Plunger Thread Length P (mm)	Collar Thread W (in)	Collar Thread Length X (mm)	Center Hole Diam. Y (mm)	Base Mounting Holes: Bolt Circle U (mm)	Thread V (in)	Thread Depth Z (mm)	Weight (kg)
9	—	—	3/4"-16UN	16	$2^{3}/_{4}$"-16	30	19.6	50.8	5/16"-18UNC	9.0	1.70
19	—	—	—	—	$2^{3}/_{4}$"-16	30	19.6	50.8	5/16"-18UNC	9.0	3.00
19	—	—	3/4"-16UN	16	$2^{3}/_{4}$"-16	30	19.6	50.8	5/16"-18UNC	9.0	3.00
19	—	—	—	—	$2^{3}/_{4}$"-16	30	19.6	50.8	5/16"-18UNC	12.7	4.60
19	54	6.9	$1^{9}/_{16}$"-16UN	19	$3^{7}/_{8}$"-12	38	26.9	82.6	3/8"-16UNC	9.4	8.20
19	54	6.9	$1^{9}/_{16}$"-16UN	19	$3^{7}/_{8}$"-12	38	26.9	82.6	3/8"-16UNC	9.4	10.50
19	54	6.9	$1^{9}/_{16}$"-16UN	19	$3^{7}/_{8}$"-12	38	26.9	82.6	3/8"-16UNC	9.4	14.60
22	63	9.7	$1^{13}/_{16}$"-16UN	22	$4^{1}/_{2}$"-12	42	33.3	92.2	3/8"-16UNC	14.0	11.55
22	63	9.7	$1^{13}/_{16}$"-16UN	22	$4^{1}/_{2}$"-12	42	33.3	92.2	3/8"-16UNC	14.0	14.75
25	63	9.7	$1^{13}/_{16}$"-16UN	22	$4^{1}/_{2}$"-12	42	33.3	92.2	3/8"-16UNC	14.0	22.45
31	91	12.7	$2^{3}/_{4}$"-16UN	19	$6^{1}/_{4}$"-12	48	53.8	130.3	1/2"-13UNC	14.0	29.70
31	91	12.7	$2^{3}/_{4}$"-16UN	19	$6^{1}/_{4}$"-12	48	53.8	130.3	1/2"-13UNC	14.0	37.00
38	126	12.7	4"-16UN	25	$8^{3}/_{8}$"-12	60	79.0	177.8	5/8"-11UNC	19.0	66.60

Cyl.

DDH Series

Double-Acting

Hollow Plunger Cylinder
Hydraulic return

Capacity:
30-145 ton

Stroke:
38-258 mm

Center Hole Diameter:
33.3~79.5 mm

Maximum Operating Pressure:
700 bar

DDH Double-Acting, Hollow Plunger Cylinders

- Hollow plunger design allows for both pull and push forces.
- Relief valves protect against over pressurizing.
- Withstands full "dead-end" loads.
- Collar threads for easy fixturing(Except DDH-1001 & DDH-1508) and all collar threads have a cap for protection.
- Special center tube protect plunger and inner of cylinder increases product life.
- Hard chrome plated plunger resists wear and corrosion.
- Wiper rings protect the piston,bore & tube from contamination.
- Stop ring for piston blow-out protection.
- Powder coat finish for increased corrosion resistance and antirust.
- DQC-3/8UF coupler and dust cap are included on all models.

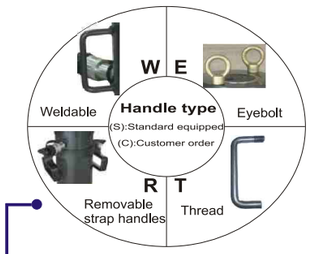

DDH-1003

DDH-3010

Handle type (S)	Model Number	Cylinder Capacity ton(kN)	Stroke (mm)	Max. Cyl. Capacity Push (kN)	Max. Cyl. Capacity Pull (kN)	Cyl. Effect. Area Push (cm^2)	Cyl. Effect. Area Pull (cm^2)	Oil Capacity Push (cm^3)	Oil Capacity Pull (cm^3)	Coll. Height A (mm)	Ext. Height B (mm)	Out. Diam. D (mm)
R	DDH-307	30(326)	178	326	213	46.6	30.4	829	541	330	508	114
R	DDH-3010		258	326	213	46.6	30.4	1202	784	431	689	114
R	DDH-603	60(576)	89	576	380	82.3	54.2	733	482	247	336	159
R	DDH-606		166	576	380	82.3	54.2	1366	900	323	489	159
R	DDH-6010		257	576	380	82.3	54.2	2115	1393	438	695	159
R	DDH-1001	95(931)	38	931	612	133.0	87.4	505	333	165	203	212
R	DDH-1003		76	931	612	133.0	87.4	1011	666	254	330	212
R	DDH-1006		153	931	612	133.0	87.4	2035	1337	342	495	212
R	DDH-10010		257	931	612	133.0	87.4	3420	2246	460	717	212
R	DDH-1508	145(1429)	203	1429	718	204.1	102.6	4144	2083	349	552	247

WARNING

Don't adjust safety valve pressure!

Apply to double-acting cylinder

DD, DDH, DLRG series

Most double-acting cylinder safety valve pressure setting 10000psi(700bar).
As surpasses the original factory hypothesis pressure safety valve will spurt oil to protect cylinder.
Leaking from safety valve, inspect connection of coupler at first.

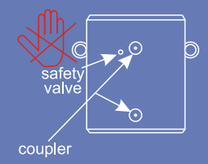

Pump Selection

A double-acting cylinder must be powered by a pump with a 4-way valve.

Cyl.

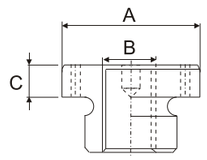

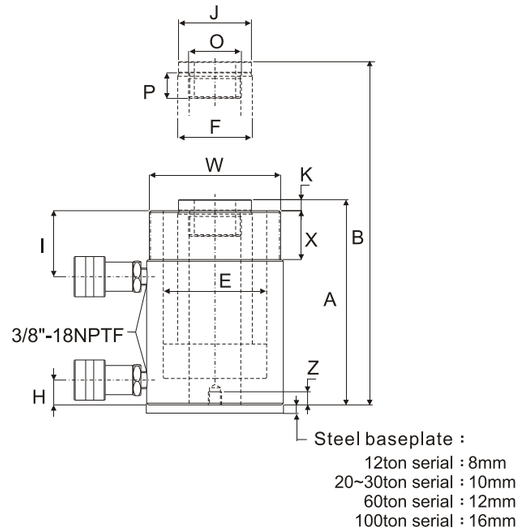

Optional Heat Treated Hollow Saddles

Cylinder Model/Cap. ton(kN)	Model No.	Saddle Dimensions A (mm)	B (in)	C (mm)
DDH-307,3010	DXKHCH-30	63	1-1/4"-7	9
DDH-603,606,6010	DXKHCH-60	91	1-5/8"-5-1/2	12
DDH-1001,1003 1006,10010	DXKHCH-100	126	2-1/2"-8	13

※ Smooth hollow saddles are standard on all DDH series.

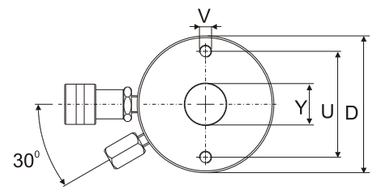

This drawing show the base mounting holes of barrel before setting steel base plate.

Cyl. Bore Diam. E (mm)	Plngr. Diam. F (mm)	Cyl. Base to Adv. Port H (mm)	Cyl. Top to Return Port I (mm)	Saddle Diam. J (mm)	Saddle Protr. Fr. Plngr. K (mm)	Plunger Internal Thread O (in)	Plunger Thread Length P (mm)	Collar Thread W (in)	Collar Thread Length X (mm)	Center Hole Diam. Y (mm)	Base Mounting Holes Bolt Circle U (mm)	Base Mounting Holes Thread V (in)	Base Mounting Holes Thread Depth Z (mm)	Weight (kg)
88.9	63.5	25	60	63	9	1 13/16"-16	22	4 1/2"-12	42	33.3	92.2	3/8"-16	15.7	21.65
88.9	63.5	25	60	63	9	1 13/16"-16	22	4 1/2"-12	42	33.3	92.2	3/8"-16	15.7	27.65
123.9	92.2	31	66	91	12	2 3/4"-16	19	6 1/4"-12	48	54.1	130.0	1/2"-13	14.0	29.60
123.9	92.2	31	66	91	12	2 3/4"-16	19	6 1/4"-12	48	54.1	130.0	1/2"-13	14.0	36.60
123.9	92.2	31	66	91	12	2 3/4"-16	19	6 1/4"-12	48	54.1	130.0	1/2"-13	14.0	46.60
165.1	127.0	38	44	126	12	4"-16	25	—	—	79.5	177.8	5/8"-11	19.0	36.60
165.1	127.0	38	85	126	12	4"-16	25	8 3/8"-12	60	79.5	177.8	5/8"-11	19.0	64.60
165.1	127.0	38	85	126	12	4"-16	25	8 3/8"-12	60	79.5	177.8	5/8"-11	19.0	82.60
165.1	127.0	38	85	126	12	4"-16	25	8 3/8"-12	60	79.5	177.8	5/8"-11	19.0	109.60
190.5	152.4	38	60	127	4	4 1/4"-12	25	—	—	79.5	214.0	5/8"-11	15.0	116.00

DD Series

Double-Acting

Long stroke Cylinder
Hydraulic return

Capacity:
10-520 ton

Stroke:
57-1219 mm

Maximum Operating Pressure:
700 bar

DD Double-Acting Cylinders

- Double-acting design allows for both pull and push forces.
- Relief valves protect against over pressurizing.
- Collar threads, plunger threads and base mounting holes for easy fixturing. (See chart)
- Hard chrome plated plunger resists wear and corrosion.
- Wiper rings protect the piston and bore from contamination.
- Stop ring for piston blow-out protection.
- Powder coat finish for increased corrosion resistance and antirust.
- DQC-3/8UF coupler and dust cap are included on all models.

※DD series cylinders are perfect for bridge lifting, building reconstruction, shipyard, utility and mining equipment maintenance.
※As need power and precise positioning of heavy loads, DD series are the best solution.

DD-308

DD-506

DD-756

WARNING

Don't adjust safety valve pressure!
Apply to double-acting cylinder
DD, DDH, DLRG series
Most double-acting cylinder safety valve pressure setting 10000psi(700bar).
As surpasses the original factory hypothesis pressure safety valve will spurt oil to protect cylinder.
Leaking from safety valve, inspect connection of coupler at first.

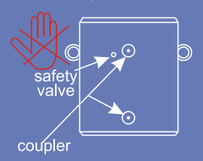

Pump Selection
A double-acting cylinder must be powered by a pump with a 4-way valve.

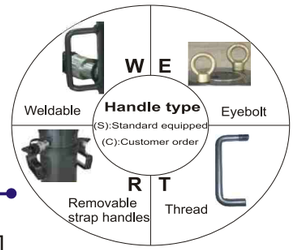

Handle type (C)	Handle type (S)	Model Number	Cylinder Capacity ton(kN)	Stroke (mm)	Max. Cylinder Capacity push (kN)	Max. Cylinder Capacity pull (kN)	Coll. Height A (mm)	Weight (kg)
		DD-1010	10(101)	254	101	33	409	12
		DD-1012		305	101	33	457	14
		DD-308	30(295)	209	295	133	387	18
		DD-3014		368	295	133	549	29
	R	DD-506	50(498)	156	498	150	331	30
	R	DD-5013		334	498	150	509	52
	R	DD-5020		511	498	150	733	68
	R	DD-756	75(718)	156	718	220	347	41
	R	DD-7513		333	718	220	525	68
	E R	DD-1006	95(933)	168	933	435	357	61
	E R	DD-10013		333	933	435	524	93
R	E	DD-10018		460	933	435	687	117
	E R	DD-1502	140(1386)	57	1386	668	196	49
R	E	DD-1506		156	1386	668	385	93
R	E	DD-15013		333	1386	668	563	124
R	E	DD-15032		815	1386	668	1116	238
R	E	DD-2006	200(1995)	152	1995	1017	430	147
R	E	DD-20013		330	1995	1017	608	199
R	E	DD-20018		457	1995	1017	765	204
R	E	DD-20024		610	1995	1017	917	279
R	E	DD-20036		914	1995	1017	1222	383
R	E	DD-20048		1219	1995	1017	1527	483
	E	DD-3006	325(3201)	153	3201	1703	485	200
	E	DD-30012		305	3201	1703	638	312
	E	DD-30018		457	3201	1703	790	385
	E	DD-30024		609	3201	1703	943	469
	E	DD-30036		915	3201	1703	1247	628
	E	DD-30048		1219	3201	1703	1552	780
	E	DD-4006	440(4292)	152	4292	2297	538	303
	E	DD-40012		305	4292	2297	690	399
	E	DD-40018		457	4292	2297	843	453
	E	DD-40024		610	4292	2297	995	597
	E	DD-40036		914	4292	2297	1300	792
	E	DD-40048		1219	4292	2297	1605	980
	E	DD-5006	520(5108)	153	5108	2838	577	432
	E	DD-50012		305	5108	2838	730	589
	E	DD-50018		457	5108	2838	882	680
	E	DD-50024		609	5108	2838	1035	816
	E	DD-50036		915	5108	2838	1339	1002
	E	DD-50048		1219	5108	2838	1644	1224

DD-1010 and DD-1012 : N=32mm ; DD-308 andDD-3014 : N=55mm.

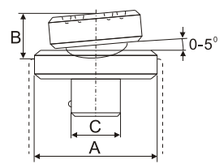

DXKCAT-10 , 50

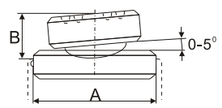

DXKCAT-100

Optional Tilt Saddle Dimensions (mm)

Cylinder Model/Cap. (ton)	Model No. Type : Tilt	A	B	C
DD-1010、1012	DXKCAT-10	35	20	22
DD- 308、3014	DXKCAT-50	50	21	35
DD- 506、5013 5020、756 7513	DXKCAT-100	71	24	—

DD -Series up to 75 tons have plunger thread for installation of DXKCAT-Series tilt saddles.

Model Number	Cylinder Capacity	Stroke	Max. Cylinder Capacity		Cylinder Effective Area		Oil Capacity		Coll. Height	Ext. Height	Out. Diam.	Cyl. Bore Diam.	Plngr. Diam.
			push	pull	push	pull	push	pull					
	ton(kN)	(mm)	(kN)		(cm^2)		(cm^3)		A (mm)	B (mm)	D (mm)	E (mm)	F (mm)
DD-1010	10 (101)	254	101	33	14.5	4.8	368	122	409	663	73	42.9	34.9
DD-1012		305	101	33	14.5	4.8	442	147	457	762	73	42.9	34.9
DD-308	30 (295)	209	295	133	42.1	19.1	879	400	387	596	101	73.2	54.1
DD-3014		368	295	133	42.1	19.1	1549	703	549	917	101	73.2	54.1
DD-506	50 (498)	156	498	150	71.2	21.5	1111	335	331	487	127	95.2	79.5
DD-5013		334	498	150	71.2	21.5	2378	718	509	843	127	95.2	79.5
DD-5020		511	498	150	71.2	21.5	3638	1099	733	1244	127	95.2	79.5
DD-756	75 (718)	156	718	220	102.6	31.4	1601	490	347	503	146	114.3	95.2
DD-7513		333	718	220	102.6	31.4	3417	1046	525	858	146	114.3	95.2
DD-1006	95 (933)	168	933	435	133.3	62.2	2238	1045	357	525	177	130.3	95.2
DD-10013		333	933	435	133.3	62.2	4439	2071	524	857	177	130.3	95.2
DD-10018		460	933	435	133.3	62.2	6132	2861	687	1147	177	130.3	95.2
DD-1502	140 (1386)	57	1386	668	198.1	95.4	1129	544	196	253	203	158.8	114.3
DD-1506		156	1386	668	198.1	95.4	3090	1488	385	541	203	158.8	114.3
DD-15013		333	1386	668	198.1	95.4	6597	3177	563	897	203	158.8	114.3
DD-15032		815	1386	668	198.1	95.4	16145	7775	1116	1931	203	158.8	114.3
DD-2006	200 (1995)	152	1995	1017	285.0	145.3	4332	2209	430	582	247	190.5	133.4
DD-20013		330	1995	1017	285.0	145.3	9405	4795	608	938	247	190.5	133.4
DD-20018		457	1995	1017	285.0	145.3	13025	6640	765	1222	247	190.5	133.4
DD-20024		610	1995	1017	285.0	145.3	17385	8863	917	1527	247	190.5	133.4
DD-20036		914	1995	1017	285.0	145.3	26049	13280	1222	2136	247	190.5	133.4
DD-20048		1219	1995	1017	285.0	145.3	34741	17712	1527	2746	247	190.5	133.4
DD-3006	325 (3201)	153	3201	1703	457.3	243.2	6997	3721	485	638	311	241.3	165.1
DD-30012		305	3201	1703	457.3	243.2	13947	7418	638	943	311	241.3	165.1
DD-30018		457	3201	1703	457.3	243.2	20889	11114	790	1247	311	241.3	165.1
DD-30024		609	3201	1703	457.3	243.2	27850	14811	943	1552	311	241.3	165.1
DD-30036		915	3201	1703	457.3	243.2	41843	22253	1247	2162	311	241.3	165.1
DD-30048		1219	3201	1703	457.3	243.2	55745	29646	1552	2771	311	241.3	165.1
DD-4006	440 (4292)	152	4292	2297	613.1	328.1	9319	4987	538	690	358	279.4	190.5
DD-40012		305	4292	2297	613.1	328.1	18700	10007	690	995	358	279.4	190.5
DD-40018		457	4292	2297	613.1	328.1	28018	14995	843	1300	358	279.4	190.5
DD-40024		610	4292	2297	613.1	328.1	37400	20014	995	1605	358	279.4	190.5
DD-40036		914	4292	2297	613.1	328.1	56037	29988	1300	2214	358	279.4	190.5
DD-40048		1219	4292	2297	613.1	328.1	74737	39996	1605	2824	358	279.4	190.5
DD-5006	520 (5108)	153	5108	2838	729.7	405.4	11164	6203	577	730	397	304.8	203.2
DD-50012		305	5108	2838	729.7	405.4	22256	12365	730	1035	397	304.8	203.2
DD-50018		457	5108	2838	729.7	405.4	33347	18526	882	1339	397	304.8	203.2
DD-50024		609	5108	2838	729.7	405.4	44440	24689	1035	1644	397	304.8	203.2
DD-50036		915	5108	2838	729.7	405.4	66768	36973	1339	2254	397	304.8	203.2
DD-50048		1219	5108	2838	729.7	405.4	88951	49418	1644	2863	397	304.8	203.2

DD-1010 andDD-1012 : N=32mm ; DD-308 and DD-3014 : N=55mm

Base to Adv. Port	Top to Return Port	Saddle Diam.	Saddle Protr. fr. Plngr.	Plunger Internal Thread	Plunger Thread Length	Base Mounting Holes			Collar Thread	Collar Thread Length	Weight
						Bolt Circle Diam.	Thread	Thread Depth			
H (mm)	I (mm)	J (mm)	K (mm)	O (in)	P (mm)	U (mm)	V (in)	Z (mm)	W (in)	X (mm)	(kg)
36	57	35	6	1"-8	25	—	—	—	2 1/4"-14	26	12
36	57	35	6	1"-8	25	—	—	—	2 1/4"-14	26	14
57	81	50	10	1 1/2"-16	25	—	—	—	3 5/16"-12	49	18
57	81	50	10	1 1/2"-16	25	—	—	—	3 5/16"-12	49	29
28	76	71	2	1"-12	25	—	—	—	5"-12	50	30
28	76	71	2	1"-12	25	—	—	—	5"-12	50	52
57	76	71	2	1"-12	25	76	1/2"-13	25	5"-12	50	68
30	76	71	6	1"-12	38	—	—	—	5 3/4"-12	38	41
30	81	71	6	1"-12	38	—	—	—	5 3/4"-12	38	68
38	71	76	3	1 3/4"-12	35	139	3/4"-10	25	6 7/8"-12	50	61
38	71	76	3	1 3/4"-12	35	139	3/4"-10	25	6 7/8"-12	50	93
41	92	76	3	1 3/4"-12	35	139	3/4"-10	25	6 7/8"-12	50	117
22	66	93	19	—	—	—	—	—	—	—	49
49	84	114	19	3 3/8"-16	35	158	3/4"-16	28	8"-12	60	93
49	84	114	19	3 3/8"-16	35	158	3/4"-16	28	8"-12	60	124
76	88	114	19	3 3/8"-16	35	—	—	—	8"-12	60	238
57	96	133	22	—	—	127	1"-8	25	—	—	147
57	96	133	22	2 1/2"-12	63	127	1"-8	25	9 3/4"-12	54	199
85	101	133	22	2 1/2"-12	63	127	1"-8	25	9 3/4"-12	54	204
85	101	133	22	2 1/2"-12	63	127	1"-8	25	9 3/4"-12	54	279
85	101	133	22	2 1/2"-12	63	127	1"-8	25	9 3/4"-12	54	383
85	101	133	22	2 1/2"-12	63	127	1"-8	25	9 3/4"-12	54	483
88	114	165	28	2 1/2"-12	82	158	1 1/4"-7	44	12 1/4"-12	58	200
88	114	165	28	2 1/2"-12	82	158	1 1/4"-7	44	12 1/4"-12	58	312
88	114	165	28	2 1/2"-12	82	158	1 1/4"-7	44	12 1/4"-12	58	385
88	114	165	28	2 1/2"-12	82	158	1 1/4"-7	44	12 1/4"-12	58	469
88	114	165	28	2 1/2"-12	82	158	1 1/4"-7	44	12 1/4"-12	58	628
88	114	165	28	2 1/2"-12	82	158	1 1/4"-7	44	12 1/4"-12	58	780
108	133	190	28	3"-12	95	203	1 1/2"-6	50	14 1/8"-8	65	303
108	133	190	28	3"-12	95	203	1 1/2"-6	50	14 1/8"-8	65	399
108	133	190	28	3"-12	95	203	1 1/2"-6	50	14 1/8"-8	65	453
108	133	190	28	3"-12	95	203	1 1/2"-6	50	14 1/8"-8	65	597
108	133	190	28	3"-12	95	203	1 1/2"-6	50	14 1/8"-8	65	792
108	133	190	28	3"-12	95	203	1 1/2"-6	50	14 1/8"-8	65	980
120	152	203	28	3 1/4"-12	108	203	1 3/4"-5	54	15 5/8"-8	79	432
120	152	203	28	3 1/4"-12	108	203	1 3/4"-5	54	15 5/8"-8	79	589
120	152	203	28	3 1/4"-12	108	203	1 3/4"-5	54	15 5/8"-8	79	680
120	152	203	28	3 1/4"-12	108	203	1 3/4"-5	54	15 5/8"-8	79	816
120	152	203	28	3 1/4"-12	108	203	1 3/4"-5	54	15 5/8"-8	79	1002
120	152	203	28	3 1/4"-12	108	203	1 3/4"-5	54	15 5/8"-8	79	1224

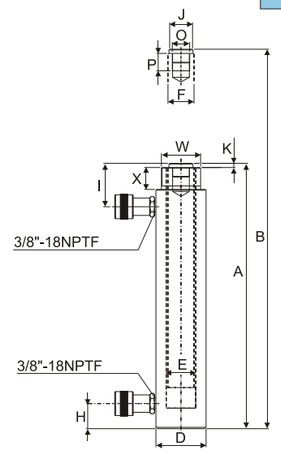

DD-1010 to DD-3014 models

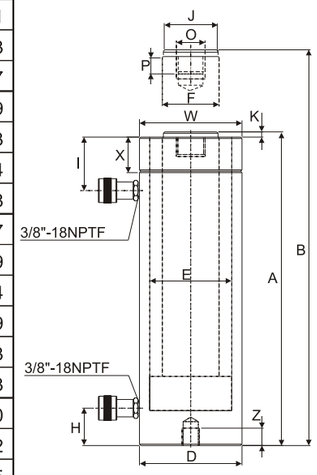

DD-506 to DD-50048 models

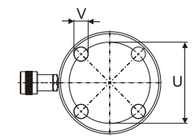

DD-1006 to DD-30048 models

No mounting hole on
DD-506/ 5013 / 5020 /
756 / 7513 / 1502 / 15032

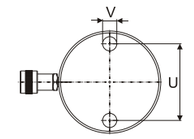

DD-4006 to DD-50048 models

DCS Series

Single-Acting

Low Height Cylinder
Spring return

Capacity:
10-90 ton

Stroke:
38-62 mm

Maximum Operating Pressure:
700 bar

DCS Single-Acting, Low Height Cylinders

- Lightweight, low profile design for use in confined spaces ,but stroke higher than DSM.
- Grooved plunger end with threaded holes for mounting tilt saddles.
- Hard chrome plated plunger and inner of barrel resists wear and corrosion.
- Maximum sized springs speed piston return and increase spring life.
- Plunger wiper reduces contaminant.
- Stop ring for piston blow-out protection.
- Powder coat finish for increased corrosion resistance and antirust.
- DQC-3/8UF coupler and dust cap are included on all models.

DCS-101

DCS-302

DCS apply heavy machine adjust level or lift large steel construction which be low height.

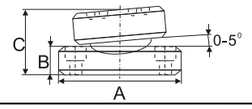

Optional Bolt Tilt Saddle Dimensions (mm)				
Cylinder Model/Cap. ton(kN)	Model Number	A	B	*C
DCS-101	**DXKCATRCS-10**	35	11	21
DCS-201,302,502	**DXKCATRCS-20**	50	15	29
DCS-1002	**DXKCATRCS-100**	71	17	35

*C dimension equals saddle protrusion from plunger. Mounting screws are included.

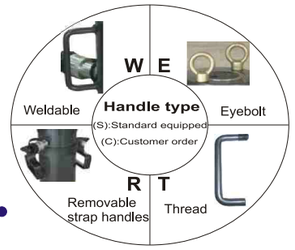

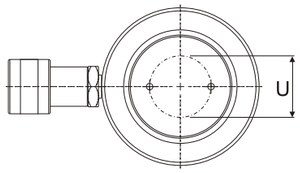

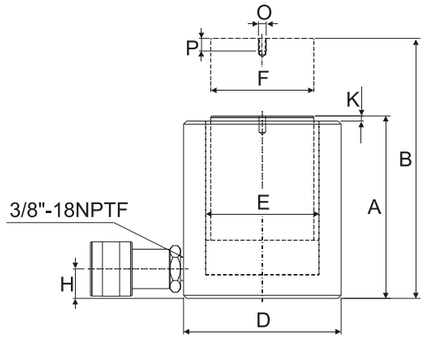

Handle type (S)	Model Number	Cylinder Capacity ton(kN)	Stroke (mm)	Cylinder Effective Area (cm^2)	Oil Capacity (cm^3)
	DCS-101	10(101)	38	14.5	55
	DCS-201	20(201)	45	28.7	129
	DCS-302	30(295)	62	42.1	261
W	**DCS-502**	45(435)	60	62.1	373
W	**DCS-1002**	90(887)	57	126.7	722

Collapsed Height A (mm)	Extended Height B (mm)	Outside Diameter D (mm)	Cylinder Bore Diam. E (mm)	Plunger Diam. F (mm)	Base to Adv. Port H (mm)	Plunger Protrusion from Base K (mm)	Thread O (mm)	Thread Depth P (mm)	Bolt Circle U (mm)	Weight (kg)	Model Number
88	126	69	42.9	38.1	17	5	M4	8	26	4.1	**DCS-101**
98	143	92	60.5	50.8	17	3	M5	8	39	5.0	**DCS-201**
117	179	101	73.2	66.5	19	3	M5	8	39	6.8	**DCS-302**
122	182	124	88.9	69.8	23	2	M5	8	39	10.9	**DCS-502**
141	198	165	127.0	92.2	31	1	M8	10	55	22.7	**DCS-1002**

Saddle

All DCS series cylinders have plunger mounting holes for installation of tilt saddles.

Control Valve

Fitting needle valve such as DV-82 is used to control cylinder speed during lifting and lowering. (See DV-Series)

Hydraulic Cylinder and Pump Sets

Basic system set-up include cylinder, male/female coupler, hose, pressure gauge,gauge accessories and pump.
Please connect DURAJACK office nearest to you for advice and technical assistance in the layout of your ideal.

DSM Series

Single-Acting

Low Height, Flat Cylinder
Spring return

Capacity:
5-150 ton

Stroke:
6-16 mm

Maximum Operating Pressure:
700 bar

DSM Single-Acting, Low Height, Flat Cylinders

- Compact and flat design for use where in a narrow space.
- Mounting holes permit easy fixturing.
- Grooved plunger ends require no saddle.
- Hard chrome plated plunger and inner of barrel resists wear and corrosion.
- Maximum sized springs speed piston return and increase spring life.
- Plunger wiper reduces contaminant.
- Stop ring for piston blow-out protection.
- Powder coat finish for increased corrosion resistance and antirust.
- DQC-3/8UF coupler and dust cap are included on all models.

DSM-50

DSM-50 is fitting with a DQC-3/8UF.

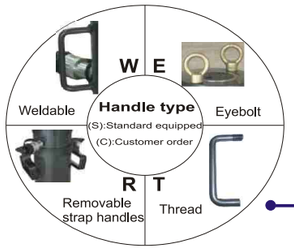

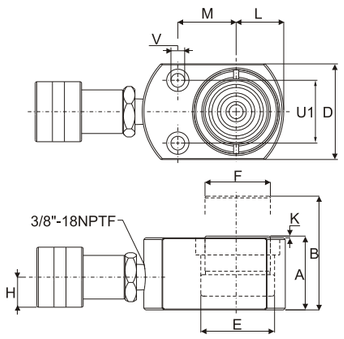

Handle type (S)	Model Number	Cylinder Capacity ton(kN)	Stroke (mm)	Cylinder Effective Area (cm^2)	Oil Cap. (cm^3)	Collapsed Height A (mm)	Ext. Height B (mm)
	DSM-50	5 (45)	6	6.5	4	32	38
	DSM-100	10 (101)	12	14.5	18	43	54
	DSM-200	20 (201)	11	28.7	32	51	62
	DSM-300	30 (295)	13	42.1	55	58	71
	DSM-500	45 (435)	16	62.1	99	66	82
W	DSM-750	75 (718)	16	102.6	164	79	95
W	DSM-1000	90 (887)	16	126.7	203	85	101
W	DSM-1500	150 (1386)	16	198.1	317	100	116

Outside Diameter D (mm)	Cylinder Bore Diam. E (mm)	Plunger Diam. F (mm)	Base to Adv. Port H (mm)	Plunger Protrusion from Base K (mm)	Plunger to Base L (mm)	Plunger to Mtg. Hole M (mm)	Weight (kg)	Base Mounting Hole: Hole Pitch. U1(mm)	Hole Diam. V(mm)	Counter Bore Diam. (mm)	Counter Bore Depth (mm)	Model Number
58 x 41	28.7	25.4	16	1	20	22	1.0	28.5	5.5	7.9	4.3	DSM-50
82 x 55	42.9	38.1	19	1	27	34	1.4	36.6	7.1	10.7	7.9	DSM-100
101x 76	60.5	50.8	19	1	39	39	3.1	49.3	10.0	15.1	9.9	DSM-200
117 x 95	73.2	63.4	19	2	47	44	4.5	52.3	10.0	15.9	11.2	DSM-300
140 x 114	88.9	69.8	19	2	57	53	6.8	66.5	11.9	19.0	12.7	DSM-500
165 x 139	114.3	82.6	19	2	69	66	11.3	76.2	13.5	20.6	14.2	DSM-750
178 x 153	127.0	92.2	19	2	76	74	14.5	76.2	13.5	20.6	14.2	DSM-1000
215 x 190	158.8	114.3	23	2	95	82	26.3	117.3	13.5	20.6	14.2	DSM-1500

DSM DSM series Accessories

※Various height magnetic adapters.
※Perfect for low clearance areas needing a little height boost.

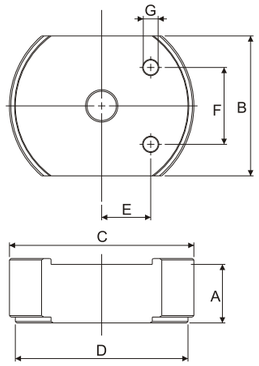

Maximum working pressure 10000psi/ 700bar

Model No.	Cylinder Model	Cylinder Height (in)	Cylinder Height (mm)	Adapter Dimension A (in)	A (mm)	B (in/mm)	C (in/mm)	D (in/mm)	E (in/mm)	F (in/mm)	G (in/mm)	Weight (kg)
DXKSM5-6	DSM-50	1.25	32.0	0.1	6.4	1.6 / 41.4	2.5 / 64.7	2.3 / 58.7	0.5 / 13.6	1.1 / 28.5	0.2 / 5.1	0.1
DXKSM5-12				0.5	12.7							0.2
DXKSM5-25				1.0	25.4							0.5
DXKSM5-31				1.3	31.8							0.6
DXKSM10-9	DSM-100	1.69	43.0	0.4	9.9	2.2 / 55.6	3.6 / 90.6	3.3 / 82.6	0.8 / 20.5	1.4 / 36.6	0.3 / 7.1	0.3
DXKSM10-20				0.8	20.0							0.7
DXKSM10-39				1.6	39.9							1.4
DXKSM20-9	DSM-200	2.00	51.0	0.4	9.9	3.0 / 76.2	4.3 / 109.6	4.0 / 101.6	1.1 / 28.4	1.9 / 49.3	0.4 / 10.1	0.6
DXKSM20-20				0.8	20.0							1.1
DXKSM20-39				1.6	39.9							2.2
DXKSM30-9	DSM-300	2.28	58.0	0.4	9.9	3.8 / 95.3	4.9 / 125.6	4.6 / 117.6	1.3 / 33.4	2.1 / 52.3	0.4 / 10.1	0.8
DXKSM30-20				0.8	20.0							1.6
DXKSM30-39				1.6	39.9							3.2

Control Valve

Fitting needle valve such as DV-82 is used to control cylinder speed during lifting and lowering. (See DV-Series)

Hydraulic Cylinder and Pump Sets

Basic system set-up include cylinder, male/female coupler, hose, pressure gauge,gauge accessories and pump.
Please connect DURAJACK office nearest to you for advice and technical assistance in the layout of your ideal.

Cyl.

DLSG Series

Single-Acting

High Tonnage Cylinder
Load return

Capacity:
50-1,000 ton

Stroke:
50-300 mm

Maximum Operating Pressure:
700 bar

DLSG Single-Acting, High Tonnage Cylinders

- Base mounting holes standard on all models.
- Single-acting, load return.
- Hard chrome plated plunger and inner of barrel resists wear and corrosion.
- Plunger wiper reduces contamination, extending cylinder life.
- Integral stop ring provides piston blow-out protection
- Powder coat finish for increased corrosion resistance and antirust.
- DQC-3/8UF coupler and dust cap are included on all models.

DLSG-506

DLSG-1006

Mounting Hole Orientation

- Top mounting hole orientation is maintained to port location.
- Bases mounting hole orientation is not maintained to port location.

Cylinder Capacity

- More above 1000 tons cylinder capacity are also available.
- Please contact DURAJACK office nearest to you for advice and technical assistance in the layout of your ideal Lift System.

Feature

- DLSG-series are equipped with interchangeable, hardened grooved saddles. (Except capacity above 1000tons)
- DQC-3/8UF coupler and dust cap.
- Top and side mount lifting eye capability.

Low Height-High Tonnage

- When low height with high force is required, load return with lock ring cyl. offer the solution to lift the first few inches.

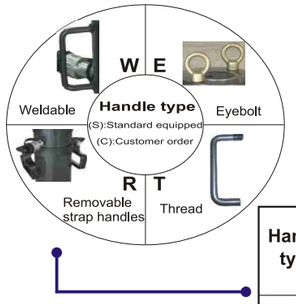

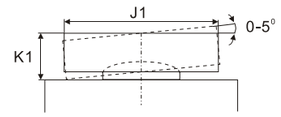

Handle type (S)	Model Number	Cylinder Cap. ton(kN)	Stroke (mm)	Effective Area (cm^2)	Coll. Height A (mm)	Wt. (kg)	Optional Tilt Saddle Model Number	Diam. J1(mm)	Ht. K1(mm)
E	DLSG-502	50 (539)	50	77.0	162	17	DXKCATG-50	50	24
E	DLSG-504		100	77.0	212	20	DXKCATG-50	50	24
E	DLSG-506		150	77.0	262	23	DXKCATG-50	50	24
E	DLSG-508		200	77.0	312	27	DXKCATG-50	50	24
E	DLSG-5010		250	77.0	362	31	DXKCATG-50	50	24
E	DLSG-5012		300	77.0	412	34	DXKCATG-50	50	24
E	DLSG-1002	100 (929)	50	132.7	182	19	DXKCATG-100	73	29
E	DLSG-1004		100	132.7	232	29	DXKCATG-100	73	29
E	DLSG-1006		150	132.7	282	40	DXKCATG-100	73	29
E	DLSG-1008		200	132.7	332	50	DXKCATG-100	73	29
E	DLSG-10010		250	132.7	382	61	DXKCATG-100	73	29
E	DLSG-10012		300	132.7	432	71	DXKCATG-100	73	29
E	DLSG-1502	150 (1390)	50	198.6	196	39	DXKCATG-150	91	31
E	DLSG-1504		100	198.6	246	52	DXKCATG-150	91	31
E	DLSG-1506		150	198.6	296	65	DXKCATG-150	91	31
E	DLSG-1508		200	198.6	346	78	DXKCATG-150	91	31
E	DLSG-15010		250	198.6	396	92	DXKCATG-150	91	31
E	DLSG-15012		300	198.6	446	105	DXKCATG-150	91	31
E	DLSG-2002	200 (1861)	50	265.9	216	68	DXKCATG-200	113	35
E	DLSG-2006		150	265.9	316	91	DXKCATG-200	113	35
E	DLSG-20012		300	265.9	466	146	DXKCATG-200	113	35
E	DLSG-2502	250 (2565)	50	366.4	235	102	DXKCATG-250	144	46
E	DLSG-2506		150	366.4	335	136	DXKCATG-250	144	46
E	DLSG-25012		300	366.4	485	207	DXKCATG-250	144	46
E	DLSG-3002	300 (3193)	50	456.2	312	184	DXKCATG-300	160	62
E	DLSG-3006		150	456.2	412	232	DXKCATG-300	160	62
E	DLSG-30012		300	456.2	562	303	DXKCATG-300	160	62
E	DLSG-4002	400 (3919)	50	559.9	375	270	DXKCATG-400	193	51
E	DLSG-4006		150	559.9	475	330	DXKCATG-400	193	51
E	DLSG-40012		300	559.9	625	421	DXKCATG-400	193	51
E	DLSG-5002	500 (5114)	50	730.6	419	401	DXKCATG-500	228	63
E	DLSG-5006		150	730.6	519	480	DXKCATG-500	228	63
E	DLSG-50012		300	730.6	669	599	DXKCATG-500	228	63
E	DLSG-6002	600 (5987)	50	855.3	429	474	DXKCATG-600	241	76
E	DLSG-6006		150	855.3	529	565	DXKCATG-600	241	76
E	DLSG-60012		300	855.3	679	701	DXKCATG-600	241	76
E	DLSG-8002	800 (8234)	50	1176.3	474	741	DXKCATG-800	287	75
E	DLSG-8006		150	1176.3	574	880	DXKCATG-800	287	75
E	DLSG-80012		300	1176.3	724	1058	DXKCATG-800	287	75
							Equipped Tilt Saddle		
E	DLSG-10002	1000 (10260)	50	1465.7	564	1062	DXKCATG-1000	311	93
E	DLSG-10006		150	1465.7	664	1213	DXKCATG-1000	311	93
E	DLSG-100012		300	1465.7	814	1439	DXKCATG-1000	311	93

* Capacity above 1000tons cylinders are equipped with tilt saddle.
If you want to opt fixed grooved saddle please connect to us order **DXKLRG-1000.**

Cyl.

Model Number	Cylinder Cap. ton(kN)	Stroke (mm)	Effective Area (cm^2)	Oil Cap. (cm^3)	Coll. Height A (mm)	Ext. Height B (mm)	Outside Diam. D (mm)	Bore Diam. E (mm)	Plunger Diam. F (mm)	Base to Advance Port H (mm)	Standard Saddle Diam. J (mm)	Saddle Protrusion from Plngr. K (mm)	Depth of plunger Hole L (mm)	Base Mounting Holes: Bolt Cir. Diam. U (mm)	Base Mounting Holes: Thread V (mm)	Base Mounting Holes: Thread Depth Z (mm)	Weight (kg)
DLSG-502	50 (539)	50	77.0	385	162	212	130	98.6	70.0	42	50	1	19	65	2xM12	22	17
DLSG-504		100	77.0	770	212	312	130	98.6	70.0	42	50	1	19	65	2xM12	22	20
DLSG-506		150	77.0	1155	262	412	130	98.6	70.0	42	50	1	19	65	2xM12	22	23
DLSG-508		200	77.0	1540	312	512	130	98.6	70.0	42	50	1	19	65	2xM12	22	27
DLSG-5010		250	77.0	1924	362	612	130	98.6	70.0	42	50	1	19	65	2xM12	22	31
DLSG-5012		300	77.0	2309	412	712	130	98.6	70.0	42	50	1	19	65	2xM12	22	34
DLSG-1002	100 (929)	50	132.7	664	182	232	165	130.0	95.0	54	75	1	19	95	2xM12	22	19
DLSG-1004		100	132.7	1327	232	332	165	130.0	95.0	54	75	1	19	95	2xM12	22	29
DLSG-1006		150	132.7	1991	282	432	165	130.0	95.0	54	75	1	19	95	2xM12	22	40
DLSG-1008		200	132.7	2655	332	532	165	130.0	95.0	54	75	1	19	95	2xM12	22	50
DLSG-10010		250	132.7	3318	382	632	165	130.0	95.0	54	75	1	19	95	2xM12	22	61
DLSG-10012		300	132.7	3982	432	732	165	130.0	95.0	54	75	1	19	95	2xM12	22	71
DLSG-1502	150 (1390)	50	198.6	993	196	246	205	159.0	114.0	61	94	1	19	130	2xM12	22	39
DLSG-1504		100	198.6	1986	246	346	205	159.0	114.0	61	94	1	19	130	2xM12	22	52
DLSG-1506		150	198.6	2978	296	446	205	159.0	114.0	61	94	1	19	130	2xM12	22	65
DLSG-1508		200	198.6	3971	346	546	205	159.0	114.0	61	94	1	19	130	2xM12	22	78
DLSG-15010		250	198.6	4964	396	646	205	159.0	114.0	61	94	1	19	130	2xM12	22	92
DLSG-15012		300	198.6	5957	446	746	205	159.0	114.0	61	94	1	19	130	2xM12	22	105
DLSG-2002	200 (1861)	50	265.9	1330	216	266	235	184.0	133.0	67	113	1	24	165	4xM12	22	68
DLSG-2006		150	265.9	3989	316	466	235	184.0	133.0	67	113	1	24	165	4xM12	22	91
DLSG-20012		300	265.9	7977	466	766	235	184.0	133.0	67	113	1	24	165	4xM12	22	146
DLSG-2502	250 (2565)	50	366.4	1832	235	285	275	216.0	165.0	73	145	1	24	190	3xM12	22	102
DLSG-2506		150	366.4	5497	335	485	275	216.0	165.0	73	145	1	24	190	3xM12	22	136
DLSG-25012		300	366.4	10993	485	785	275	216.0	165.0	73	145	1	24	190	3xM12	22	207
DLSG-3002	300 (3193)	50	456.2	2281	312	362	310	241.0	197.0	101	177	1	19	180	3xM16	36	184
DLSG-3006		150	456.2	6843	412	562	310	241.0	197.0	101	177	1	19	180	3xM16	36	232
DLSG-30012		300	456.2	13685	562	862	310	241.0	197.0	101	177	1	19	180	3xM16	36	303
DLSG-4002	400 (3919)	50	559.9	2800	375	425	350	267.0	216.0	114	196	3	27	205	3xM16	36	270
DLSG-4006		150	559.9	8399	475	625	350	267.0	216.0	114	196	3	27	205	3xM16	36	330
DLSG-40012		300	559.9	16797	625	925	350	267.0	216.0	114	196	3	27	205	3xM16	36	421
DLSG-5002	500 (5114)	50	730.6	3653	419	469	400	305.0	248.0	114	228	3	27	250	3xM24	38	401
DLSG-5006		150	730.6	10959	519	669	400	305.0	248.0	114	228	3	27	250	3xM24	38	480
DLSG-50012		300	730.6	21918	669	969	400	305.0	248.0	114	228	3	27	250	3xM24	38	599
DLSG-6002	600 (5987)	50	855.3	4276	429	479	430	330.0	267.0	114	247	3	27	275	3xM24	38	474
DLSG-6006		150	855.3	12829	529	679	430	330.0	267.0	114	247	3	27	275	3xM24	38	565
DLSG-60012		300	855.3	25659	679	979	430	330.0	267.0	114	247	3	27	275	3xM24	38	701
DLSG-8002	800 (8234)	50	1176.3	5881	474	524	505	387.0	317.0	149	297	3	27	330	3xM24	38	741
DLSG-8006		150	1176.3	17644	574	724	505	387.0	317.0	149	297	3	27	330	3xM24	38	880
DLSG-80012		300	1176.3	35288	724	1024	505	387.0	317.0	149	297	3	27	330	3xM24	38	1058
DLSG-10002	1000 (10260)	50	1465.7	7329	564	614	560	432.0	343.0	174	323	3	27	375	3xM24	38	1062
DLSG-10006		150	1465.7	21986	664	814	560	432.0	343.0	174	323	3	27	375	3xM24	38	1213
DLSG-100012		300	1465.7	43972	814	1114	560	432.0	343.0	174	323	3	27	375	3xM24	38	1439

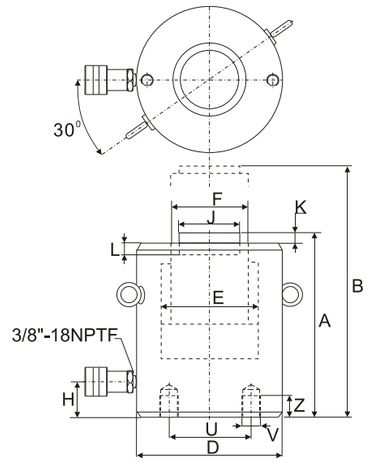

DLSG-50 to DLSG-150 models

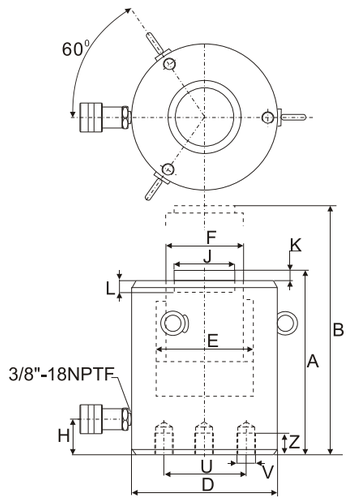

DLSG-200 to DLSG-1000 models

Cyl.

DLRG Series

Double-Acting

High Tonnage Cylinder
Hydraulic return

Capacity:
50-1,600 ton

Stroke:
50-300 mm

Maximum Operating Pressure:
700 bar

DLRG Double-Acting, High Tonnage Cylinders

- Base mounting holes standard on all models.
- Double-acting, for push and pull.
- Hard chrome plated plunger resists wear and corrosion.
- Safety valve in retract side of cylinder helps to prevent damage in case of accidental over-pressurization.
- Interchangeable, hardened grooved saddles are standard.
- Plunger wiper reduces contamination, extending cylinder life.
- Powder coat finish for increased corrosion resistance and antirust.
- DQC-3/8UF coupler and dust cap are included on all models.

DLRG-506

DLRG-1006

Mounting Hole Orientation

- Top mounting hole orientation is maintained to port location.
- Bases mounting hole orientation is not maintained to port location.

Cylinder Capacity

- More above 1000 tons cylinder capacity are also available.
- Please contact DURAJACK office nearest to you for advice and technical assistance in the layout of your ideal Lift System.

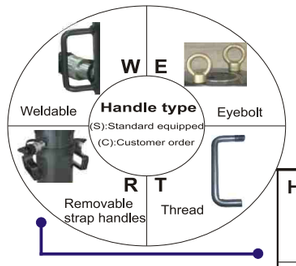

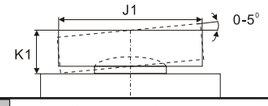

Handle type (S)	Model Number	Cylinder ton(kN)	Stroke (mm)	Max. Cyl. Cap. Push (kN)	Max. Cyl. Cap. Pull (kN)	Coll. Height A (mm)	Wt. (kg)	Optional Tilt Saddle Model Number	Optional Tilt Saddle Diam. J1 (mm)	Optional Tilt Saddle Height K1 (mm)
E	DLRG-502	50 (539)	50	539	269	162	17	DXKCATG-50	50	24
E	DLRG-504		100	539	269	212	20	DXKCATG-50	50	24
E	DLRG-506		150	539	269	262	23	DXKCATG-50	50	24
E	DLRG-508		200	539	269	312	27	DXKCATG-50	50	24
E	DLRG-5010		250	539	269	362	31	DXKCATG-50	50	24
E	DLRG-5012		300	539	269	412	34	DXKCATG-50	50	24
E	DLRG-1002	100 (929)	50	929	433	182	29	DXKCATG-100	73	29
E	DLRG-1004		100	929	433	232	34	DXKCATG-100	73	29
E	DLRG-1006		150	929	433	282	40	DXKCATG-100	73	29
E	DLRG-1008		200	929	433	332	46	DXKCATG-100	73	29
E	DLRG-10010		250	929	433	382	52	DXKCATG-100	73	29
E	DLRG-10012		300	929	433	432	65	DXKCATG-100	73	29
E	DLRG-1502	150 (1390)	50	1390	675	196	39	DXKCATG-150	91	31
E	DLRG-1504		100	1390	675	246	52	DXKCATG-150	91	31
E	DLRG-1506		150	1390	675	296	65	DXKCATG-150	91	31
E	DLRG-1508		200	1390	675	346	78	DXKCATG-150	91	31
E	DLRG-15010		250	1390	675	396	92	DXKCATG-150	91	31
E	DLRG-15012		300	1390	675	446	105	DXKCATG-150	91	31
E	DLRG-2002	200 (1861)	50	1861	889	216	55	DXKCATG-200	113	35
E	DLRG-2006		150	1861	889	316	91	DXKCATG-200	113	35
E	DLRG-20012		300	1861	889	466	146	DXKCATG-200	113	35
E	DLRG-2502	250 (2565)	50	2565	1068	235	102	DXKCATG-250	144	46
E	DLRG-2506		150	2565	1068	335	136	DXKCATG-250	144	46
E	DLRG-25012		300	2565	1068	485	207	DXKCATG-250	144	46
E	DLRG-3002	300 (3193)	50	3193	1060	312	184	DXKCATG-300	160	62
E	DLRG-3006		150	3193	1060	412	232	DXKCATG-300	160	62
E	DLRG-30012		300	3193	1060	562	303	DXKCATG-300	160	62
E	DLRG-4002	400 (3919)	50	3919	1354	375	270	DXKCATG-400	193	51
E	DLRG-4006		150	3919	1354	475	330	DXKCATG-400	193	51
E	DLRG-40012		300	3919	1354	625	421	DXKCATG-400	193	51
E	DLRG-5002	500 (5114)	50	5114	1733	419	401	DXKCATG-500	228	63
E	DLRG-5006		150	5114	1733	519	480	DXKCATG-500	228	63
E	DLRG-50012		300	5114	1733	669	599	DXKCATG-500	228	63
E	DLRG-6002	600 (5987)	50	5987	2068	429	474	DXKCATG-600	241	76
E	DLRG-6006		150	5987	2068	529	565	DXKCATG-600	241	76
E	DLRG-60012		300	5987	2068	679	701	DXKCATG-600	241	76
E	DLRG-8002	800 (8234)	50	8234	2709	474	741	DXKCATG-800	287	75
E	DLRG-8006		150	8234	2709	574	868	DXKCATG-800	287	75
E	DLRG-80012		300	8234	2709	724	1058	DXKCATG-800	287	75
		1000 (10260)						Equipped Tilt Saddle		
E	DLRG-10002		50	10260	3792	564	1062	DXKCATG-1000	311	93
E	DLRG-10006		150	10260	3792	664	1213	DXKCATG-1000	311	93
E	DLRG-100012		300	10260	3792	814	1439	DXKCATG-1000	311	93
E	DLRG-16006	1600 (16024)	155	16024	4891	825	2179	DXKCATG-1600	385	125

* Capacity above 1000tons cylinders are equipped with tilt saddle.
If you want to opt fixed grooved saddle please connect to us order **DXKLRG-1000.**

WARNING

Don't adjust safety valve pressure!
Apply to double-acting cylinder
DD, DDH, DLRG series
Most double-acting cylinder safety valve pressure setting 10000psi(700bar).
As surpasses the original factory hypothesis pressure safety valve will spurt oil to protect cylinder.
Leaking from safety valve, inspect connection of coupler at first.

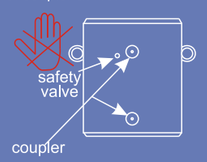

Feature

- DLRG-series are equipped with interchangeable, hardened grooved saddles. (Except capacity above 1000tons)
- DQC-3/8UF coupler and dust cap.
- Top and side mount lifting eye capability.

Pump Selection

A double-acting cylinder must be powered by a pump with a 4-way valve.

Model Number	Cylinder Cap.	Stroke	Max. Cylinder Cap.		Cylinder Effective Area		Oil Cap.		Coll. Height	Ext. Height	Outside Diam.	Cyl. Bore Diam.	Plunger Diam.
			Push	Pull	Push	Pull	Push	Pull					
	ton(kN)	(mm)	(kN)		(cm^2)		(cm^3)		A (mm)	B (mm)	D (mm)	E (mm)	F (mm)
DLRG-502	50 (539)	50	539	269	76.2	37.7	385	192	162	212	130	98.6	70.0
DLRG-504		100	539	269	76.2	37.7	770	385	212	312	130	98.6	70.0
DLRG-506		150	539	269	76.2	37.7	1155	577	262	412	130	98.6	70.0
DLRG-508		200	539	269	76.2	37.7	1540	770	312	512	130	98.6	70.0
DLRG-5010		250	539	269	76.2	37.7	1924	962	362	612	130	98.6	70.0
DLRG-5012		300	539	269	76.2	37.7	2309	1155	412	712	130	98.6	70.0
DLRG-1002	100 (929)	50	929	433	132.7	61.9	664	309	182	232	165	130.0	95.0
DLRG-1004		100	929	433	132.7	61.9	1327	619	232	332	165	130.0	95.0
DLRG-1006		150	929	433	132.7	61.9	1991	928	282	432	165	130.0	95.0
DLRG-1008		200	929	433	132.7	61.9	2655	1237	332	532	165	130.0	95.0
DLRG-10010		250	929	433	132.7	61.9	3318	1546	382	632	165	130.0	95.0
DLRG-10012		300	929	433	132.7	61.9	3982	1856	432	732	165	130.0	95.0
DLRG-1502	150 (1390)	50	1390	675	198.6	96.5	993	482	196	246	205	159.0	114.0
DLRG-1504		100	1390	675	198.6	96.5	1986	965	246	346	205	159.0	114.0
DLRG-1506		150	1390	675	198.6	96.5	2978	1447	296	446	205	159.0	114.0
DLRG-1508		200	1390	675	198.6	96.5	3971	1930	346	546	205	159.0	114.0
DLRG-15010		250	1390	675	198.6	96.5	4964	2412	396	646	205	159.0	114.0
DLRG-15012		300	1390	675	198.6	96.5	5957	2895	446	746	205	159.0	114.0
DLRG-2002	200 (1861)	50	1861	889	265.9	127.0	1330	635	216	266	235	184.0	133.1
DLRG-2006		150	1861	889	265.9	127.0	3989	1905	316	466	235	184.0	133.1
DLRG-20012		300	1861	889	265.9	127.0	7977	3809	466	766	235	184.0	133.1
DLRG-2502	250 (2565)	50	2565	1068	366.4	152.6	1832	763	235	285	275	216.0	165.1
DLRG-2506		150	2565	1068	366.4	152.6	5497	2289	335	485	275	216.0	165.1
DLRG-25012		300	2565	1068	366.4	152.6	10993	4578	485	785	275	216.0	165.1
DLRG-3002	300 (3193)	50	3193	1060	456.2	151.4	2281	757	312	362	310	241.0	197.1
DLRG-3006		150	3193	1060	456.2	151.4	6843	2270	412	562	310	241.0	197.1
DLRG-30012		300	3193	1060	456.2	151.4	13685	4541	562	862	310	241.0	197.1
DLRG-4002	400 (3919)	50	3919	1354	559.9	193.5	2800	967	375	425	350	267.0	216.0
DLRG-4006		150	3919	1354	559.9	193.5	8399	2902	475	625	350	267.0	216.0
DLRG-40012		300	3919	1354	559.9	193.5	16797	5804	625	925	350	267.0	216.0
DLRG-5002	500 (5114)	50	5114	1733	730.6	247.6	3653	1238	419	469	400	305.0	248.0
DLRG-5006		150	5114	1733	730.6	247.6	10959	3713	519	669	400	305.0	248.0
DLRG-50012		300	5114	1733	730.6	247.6	21918	7427	669	969	400	305.0	248.0
DLRG-6002	600 (5987)	50	5987	2068	855.3	295.4	4276	1477	429	479	430	330.0	267.0
DLRG-6006		150	5987	2068	855.3	295.4	12829	4431	529	679	430	330.0	267.0
DLRG-60012		300	5987	2068	855.3	295.4	25659	8862	679	979	430	330.0	267.0
DLRG-8002	800 (8234)	50	8234	2709	1176.3	387.0	5881	1935	474	524	505	387.0	317.0
DLRG-8006		150	8234	2709	1176.3	387.0	17644	5806	574	724	505	387.0	317.0
DLRG-80012		300	8234	2709	1176.3	387.0	35288	11611	724	1024	505	387.0	317.0
DLRG-10002	1000 (10260)	50	10260	3792	1465.7	541.7	7329	2709	564	614	560	432.0	343.0
DLRG-10006		150	10260	3792	1465.7	541.7	21986	8126	664	814	560	432.0	343.0
DLRG-100012		300	10260	3792	1465.7	541.7	43972	16252	814	1114	560	432.0	343.0
DLRG-16006	1600 (16024)	155	16024	4891	2289.1	699.3	35495	10845	825	980	710	540.0	450.0

Base to Advance Port	Top to Retract Port	Standard Saddle Diam.	Saddle Protrusion from plngr.	Depth of Plunger Hole	Base Mounting Hole Dimensions			Weight
					Bolt Cir. Diam.	Thread	Thread Depth	
H (mm)	I (mm)	J (mm)	K (mm)	L (mm)	U (mm)	V (mm)	Z (mm)	(kg)
42	33	50	1	19	65	2xM12	22	17
42	33	50	1	19	65	2xM12	22	20
42	33	50	1	19	65	2xM12	22	23
42	33	50	1	19	65	2xM12	22	27
42	33	50	1	19	65	2xM12	22	31
42	33	50	1	19	65	2xM12	22	34
54	48	75	1	19	95	2xM12	22	29
54	48	75	1	19	95	2xM12	22	34
54	48	75	1	19	95	2xM12	22	40
54	48	75	1	19	95	2xM12	22	46
54	48	75	1	19	95	2xM12	22	52
54	48	75	1	19	95	2xM12	22	65
61	56	94	1	19	130	2xM12	22	39
61	56	94	1	19	130	2xM12	22	52
61	56	94	1	19	130	2xM12	22	65
61	56	94	1	19	130	2xM12	22	78
61	56	94	1	19	130	2xM12	22	92
61	56	94	1	19	130	2xM12	22	105
67	56	113	1	24	165	4xM12	22	55
67	56	113	1	24	165	4xM12	22	91
67	56	113	1	24	165	4xM12	22	146
73	78	145	1	24	190	3xM12	22	102
73	78	145	1	24	190	3xM12	22	136
73	78	145	1	24	190	3xM12	22	207
101	75	177	1	19	180	3xM16	36	184
101	75	177	1	19	180	3xM16	36	232
101	75	177	1	19	180	3xM16	36	303
114	105	196	3	27	205	3xM16	36	270
114	105	196	3	27	205	3xM16	36	330
114	105	196	3	27	205	3xM16	36	421
114	135	228	3	27	250	3xM24	38	401
114	135	228	3	27	250	3xM24	38	480
114	135	228	3	27	250	3xM24	38	599
114	135	247	3	27	275	3xM24	38	474
114	135	247	3	27	275	3xM24	38	565
114	135	247	3	27	275	3xM24	38	701
149	135	297	3	27	330	3xM24	38	741
149	135	297	3	27	330	3xM24	38	868
149	135	297	3	27	330	3xM24	38	1058
174	170	323	3	27	375	3xM24	38	1062
174	170	323	3	27	375	3xM24	38	1213
174	170	323	3	27	375	3xM24	38	1439
205	170	—	—	—	400	3xM24	30	2179

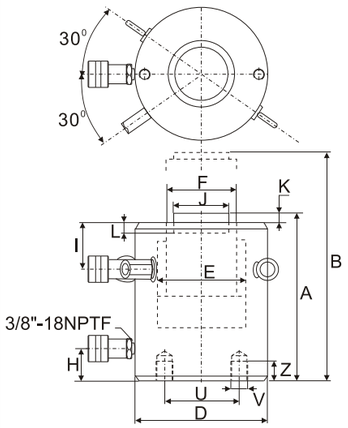

DLRG-50 to
DLRG-150 model

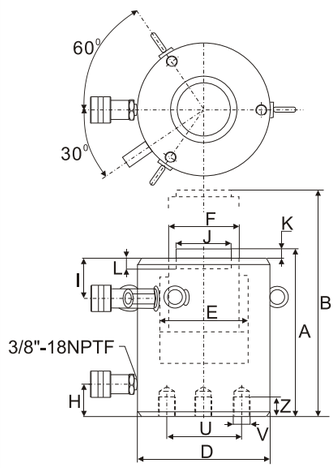

DLRG-200 to
DLRG-1600 model

DLL Series

Single-Acting

High Tonnage Lock Nut Cylinder
Load return

Capacity:
50-1,000 ton

Stroke:
50-300 mm

Maximum Operating Pressure:
700 bar

DLL Single-Acting, High Tonnage, Lock Nut Cylinders

- Hard chrome plated inner of barrel resistes wear and corrosion.
- Safety lock nut for mechanical load holding.
- Interchangeable, hardened grooved saddles are standard.
- Single-acting load return.
- Overflow port functions as a stroke limiter.
- Special coating on piston and lock nut improves corrosion and abrasion resistance.
- Powder coat finish for increased corrosion resistance and antirust.
- DQC-3/8UF coupler and dust cap are included on all models.

DLL-502

Cylinder Capacity

- More above 1000 tons cylinder capacity are also available.
- Please contact DURAJACK office nearest to you for advice and technical as sistance in the layout of your ideal Lift System.

DLLR Optional Features

DLL series cylinder can be designed in Double-acting, please connect to DURAJACK.

Double-acting : DLLR

Feature

- DLL-series are equipped with interchangeable, hardened grooved saddles. (Except capacity above 1000tons)
- DQC-3/8UF coupler and dust cap.
- Top and side mount lifting eye capability.

WARNING

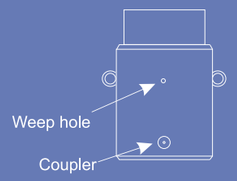

Apply to Single-acting, High tonnage cylinder DLP, DLL and DLS series

When stroke limit is reached; overflow port ("weep hole") spurt oil to prevents piston from being overextended.

Optional Features

To add optional features to your cylinder, add the follow suffixes to the end of the model number.

Spring return : XF

Example :

DLL-502 with spring return, order: DLL-502XF
Technical specifications for these features are available from DURAJACK..

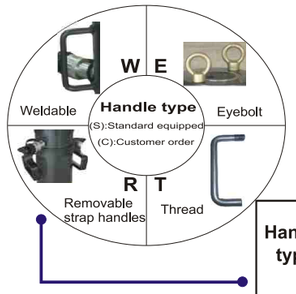

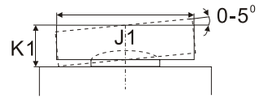

Handle type	Model Number	Cylinder Cap.	Stroke	Effective Area	Coll. Height	Wt.	Optional Tilt Saddle		
							Model Number	Diam.	Height
(S)		ton(kN)	(mm)	(cm^2)	A (mm)	(kg)		J1(mm)	K1(mm)
E	DLL-502	50 (496)	50	70.9	164	15	DXKCAT-100	71	24
E	DLL-504		100	70.9	214	20	DXKCAT-100	71	24
E	DLL-506		150	70.9	264	25	DXKCAT-100	71	24
E	DLL-508		200	70.9	314	30	DXKCAT-100	71	24
E	DLL-5010		250	70.9	364	35	DXKCAT-100	71	24
E	DLL-5012		300	70.9	414	40	DXKCAT-100	71	24
E	DLL-1002	100 (929)	50	132.7	187	30	DXKCAT-100	71	24
E	DLL-1004		100	132.7	237	39	DXKCAT-100	71	24
E	DLL-1006		150	132.7	287	48	DXKCAT-100	71	24
E	DLL-1008		200	132.7	337	56	DXKCAT-100	71	24
E	DLL-10010		250	132.7	387	64	DXKCAT-100	71	24
E	DLL-10012		300	132.7	437	73	DXKCAT-100	71	24
E	DLL-1502	150 (1390)	50	198.6	209	53	DXKCAT-200	130	20
E	DLL-1504		100	198.6	259	66	DXKCAT-200	130	20
E	DLL-1506		150	198.6	309	78	DXKCAT-200	130	20
E	DLL-1508		200	198.6	359	92	DXKCAT-200	130	20
E	DLL-15010		250	198.6	409	104	DXKCAT-200	130	20
E	DLL-15012		300	198.6	459	117	DXKCAT-200	130	20
E	DLL-2002	200 (1859)	50	265.6	243	83	DXKCAT-200	130	20
E	DLL-2006		150	265.6	343	117	DXKCAT-200	130	20
E	DLL-20012		300	265.6	493	170	DXKCAT-200	130	20
E	DLL-2502	250 (2562)	50	366.1	249	116	DXKCAT-250	150	21
E	DLL-2506		150	366.1	349	162	DXKCAT-250	150	21
E	DLL-25012		300	366.1	499	234	DXKCAT-250	150	21
E	DLL-3002	300 (3193)	50	456.2	295	173	DXKCAT-300	195	75
E	DLL-3006		150	456.2	395	233	DXKCAT-300	195	75
E	DLL-30012		300	456.2	545	323	DXKCAT-300	195	75
E	DLL-4002	400 (3919)	50	559.9	335	250	DXKCAT-400	225	85
E	DLL-4006		150	559.9	435	327	DXKCAT-400	225	85
E	DLL-40012		300	559.9	585	441	DXKCAT-400	225	85
E	DLL-5002	500 (5118)	50	731.1	375	367	DXKCAT-500	250	91
E	DLL-5006		150	731.1	475	466	DXKCAT-500	250	91
E	DLL-50012		300	731.1	625	617	DXKCAT-500	250	91
E	DLL-6002	600 (5983)	50	854.8	395	446	DXKCAT-600	275	96
E	DLL-6006		150	854.8	495	562	DXKCAT-600	275	96
E	DLL-60012		300	854.8	645	737	DXKCAT-600	275	96
E	DLL-8002	800 (8238)	50	1176.9	455	709	DXKCAT-800	320	123
E	DLL-8006		150	1176.9	555	870	DXKCAT-800	320	123
E	DLL-80012		300	1176.9	705	1110	DXKCAT-800	320	123
E	DLL-10002	1000 (10260)	50	1466.4	495	949	DXKCAT-1000	360	136
E	DLL-10006		150	1466.4	595	1141	DXKCAT-1000	360	136
E	DLL-100012		300	1466.4	745	1430	DXKCAT-1000	360	136

Cyl.

Model Number	Cylinder Cap. ton(kN)	Stroke (mm)	Effective Area (cm^2)	Oil Cap. (cm^3)	Coll. Height A (mm)	Ext. Height B (mm)	Outside Diam. D (mm)	Bore Diam. E (mm)	Plunger Diam. (threaded) F (mm)	Base to Advance Port H (mm)	Stand. Saddle Diam. J (mm)	Saddle Protrusion from Plgr. K (mm)	Depth of Plunger Hole L (mm)	Lock Nut Height S (mm)	Weight (kg)
DLL-502	50 (496)	50	70.9	355	164	214	125	95.0	Tr95x4	30	71	2	15	36	15
DLL-504		100	70.9	709	214	314	125	95.0	Tr95x4	30	71	2	15	36	20
DLL-506		150	70.9	1064	264	414	125	95.0	Tr95x4	30	71	2	15	36	25
DLL-508		200	70.9	1418	314	514	125	95.0	Tr95x4	30	71	2	15	36	30
DLL-5010		250	70.9	1773	364	614	125	95.0	Tr95x4	30	71	2	15	36	35
DLL-5012		300	70.9	2127	414	714	125	95.0	Tr95x4	30	71	2	15	36	40
DLL-1002	100 (929)	50	132.7	664	187	237	165	130.0	Tr130x6	30	71	2	15	44	30
DLL-1004		100	132.7	1327	237	337	165	130.0	Tr130x6	30	71	2	15	44	39
DLL-1006		150	132.7	1991	287	437	165	130.0	Tr130x6	30	71	2	15	44	48
DLL-1008		200	132.7	2654	337	537	165	130.0	Tr130x6	30	71	2	15	44	56
DLL-10010		250	132.7	3318	387	637	165	130.0	Tr130x6	30	71	2	15	44	64
DLL-10012		300	132.7	3981	437	737	165	130.0	Tr130x6	30	71	2	15	44	73
DLL-1502	150 (1390)	50	198.6	993	209	259	205	159.0	Tr159x6	39	130	2	25	44	53
DLL-1504		100	198.6	1986	259	359	205	159.0	Tr159x6	39	130	2	25	44	66
DLL-1506		150	198.6	2979	309	459	205	159.0	Tr159x6	39	130	2	25	44	78
DLL-1508		200	198.6	3972	359	559	205	159.0	Tr159x6	39	130	2	25	44	92
DLL-15010		250	198.6	4965	409	659	205	159.0	Tr159x6	39	130	2	25	44	104
DLL-15012		300	198.6	5958	459	759	205	159.0	Tr159x6	39	130	2	25	44	117
DLL-2002	200 (1859)	50	265.6	1330	243	293	235	184.0	Tr184x6	50	130	2	25	50	83
DLL-2006		150	265.6	3989	343	493	235	184.0	Tr184x6	50	130	2	25	50	117
DLL-20012		300	265.6	7995	493	793	235	184.0	Tr184x6	50	130	2	25	50	170
DLL-2502	250 (2562)	50	366.1	1832	249	299	275	216.0	Tr216x6	50	150	2	25	56	116
DLL-2506		150	366.1	5496	349	499	275	216.0	Tr216x6	50	150	2	25	56	162
DLL-25012		300	366.1	10976	499	799	275	216.0	Tr216x6	50	150	2	25	56	234
DLL-3002	300 (3193)	50	456.2	2281	295	345	310	241.0	Tr241x6	59	139	5	25	60	173
DLL-3006		150	456.2	6843	395	545	310	241.0	Tr241x6	59	139	5	25	60	233
DLL-30012		300	456.2	13740	545	845	310	241.0	Tr241x6	59	139	5	25	60	323
DLL-4002	400 (3919)	50	559.9	2800	335	385	350	267.0	Tr266x6	70	159	5	25	70	250
DLL-4006		150	559.9	8399	435	585	350	267.0	Tr266x6	70	159	5	25	70	327
DLL-40012		300	559.9	16800	585	885	350	267.0	Tr266x6	70	159	5	25	70	441
DLL-5002	500 (5118)	50	731.1	3653	375	425	400	305.0	Tr305x6	80	179	5	25	80	367
DLL-5006		150	731.1	10967	475	625	400	305.0	Tr305x6	80	179	5	25	80	466
DLL-50012		300	731.1	21930	625	925	400	305.0	Tr305x6	80	179	5	25	80	617
DLL-6002	600 (5983)	50	854.8	4277	395	445	430	330.0	Tr330x6	85	194	5	25	85	446
DLL-6006		150	854.8	12830	495	645	430	330.0	Tr330x6	85	194	5	25	85	562
DLL-60012		300	854.8	25650	645	945	430	330.0	Tr330x6	85	194	5	25	85	737
DLL-8002	800 (8238)	50	1176.9	5882	455	505	505	387.0	Tr387x6	100	224	5	25	100	709
DLL-8006		150	1176.9	17645	555	705	505	387.0	Tr387x6	100	224	5	25	100	870
DLL-80012		300	1176.9	35370	705	1005	505	387.0	Tr387x6	100	224	5	25	100	1110
DLL-10002	1000 (10260)	50	1466.4	7329	495	545	560	432.0	Tr432x6	110	249	5	25	110	949
DLL-10006		150	1466.4	21986	595	745	560	432.0	Tr432x6	110	249	5	25	110	1141
DLL-100012		300	1466.4	43980	745	1045	560	432.0	Tr432x6	110	249	5	25	110	1430

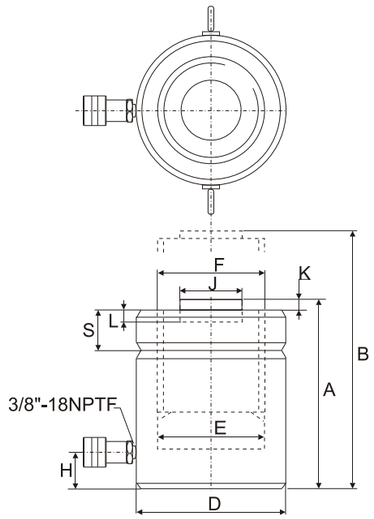

DLL-50 to DLL-250 models

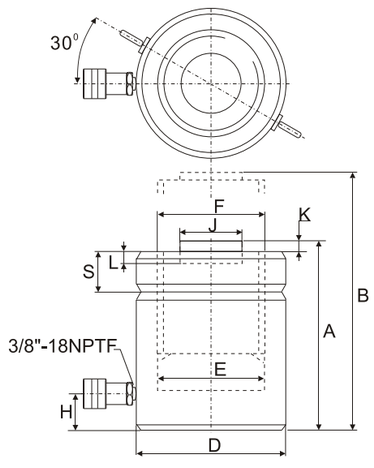

DLL-300 to DLL-1000 models

DLS Series

Single-Acting

High Tonnage Cylinder
Load return

Capacity:
50-1,000 ton

Stroke:
50-300 mm

Maximum Operating Pressure:
700 bar

DLS Single-Acting, High Tonnage Cylinder

- Lowest collapsed height for use in confined spaces.
- Interchangeable, hardened grooved saddles are standard.
- Single-acting, load return.
- Overflow port functions as a stroke limiter.
- Hard chrome plated plunger resists wear and corrosion.
- Plunger wiper reduces contamination, extending cylinder life.
- Powder coat finish for increased corrosion resistance and antirust.
- DQC-3/8UF coupler and dust cap are included on all models.

DLS-502

DLS-1006

Cylinder Capacity

- More above 1000 tons cylinder capacity are also available.
- Please contact DURAJACK office nearest to you for advice and technical as sistance in the layout of your ideal Lift System.

DLSR Optional Features

DLSR series cylinder can be designed in Double-acting, please connect to DURAJACK.

Double-acting : DLSR

Feature

- DLS-series are equipped with interchangeable, hardened grooved saddles. (Except capacity above 1000tons)
- DQC-3/8UF coupler and dust cap.
- Top and side mount lifting eye capability.

WARNING

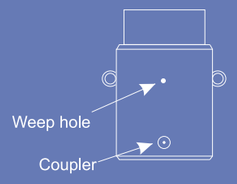

Apply to Single-acting, High tonnage cylinder DLP, DLL and DLS series

When stroke limit is reached; overflow port ("weep hole") spurt oil to prevents piston from being overextended.

Optional Spring

To add optional features to your cylinder, add the follow suffixes to the end of the model number.

Spring return : XF

Example :
DLS-502 with spring return, order: DLS-502XF
Technical specifications for these features are available from DURAJACK.

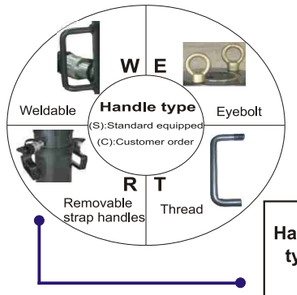

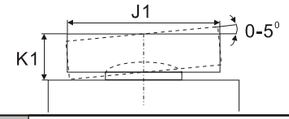

Handle type (S)	Model Number	Cylinder Cap. ton(kN)	Stroke (mm)	Effective Area (cm^2)	Coll. Height A (mm)	Wt. (kg)	Optional Tilt Saddle Model Number	Diam. J1 (mm)	Height K1 (mm)
E	DLS-502	50 (496)	50	70.9	128	14	DXKCAT-100	71	24
E	DLS-504		100	70.9	178	18	DXKCAT-100	71	24
E	DLS-506		150	70.9	228	23	DXKCAT-100	71	24
E	DLS-508		200	70.9	278	28	DXKCAT-100	71	24
E	DLS-5010		250	70.9	327	33	DXKCAT-100	71	24
E	DLS-5012		300	70.9	378	38	DXKCAT-100	71	24
E	DLS-1002	100 (929)	50	132.7	143	24	DXKCAT-100	71	24
E	DLS-1004		100	132.7	193	32	DXKCAT-100	71	24
E	DLS-1006		150	132.7	243	40	DXKCAT-100	71	24
E	DLS-1008		200	132.7	293	49	DXKCAT-100	71	24
E	DLS-10010		250	132.7	343	58	DXKCAT-100	71	24
E	DLS-10012		300	132.7	392	66	DXKCAT-100	71	24
E	DLS-1502	150 (1390)	50	198.6	165	43	DXKCAT-200	130	20
E	DLS-1504		100	198.6	215	55	DXKCAT-200	130	20
E	DLS-1506		150	198.6	265	69	DXKCAT-200	130	20
E	DLS-1508		200	198.6	315	82	DXKCAT-200	130	20
E	DLS-15010		250	198.6	365	95	DXKCAT-200	130	20
E	DLS-15012		300	198.6	414	108	DXKCAT-200	130	20
E	DLS-2002	200 (1859)	50	265.6	193	66	DXKCAT-200	130	20
E	DLS-2006		150	265.6	293	101	DXKCAT-200	130	20
E	DLS-20012		300	265.6	443	154	DXKCAT-200	130	20
E	DLS-2502	250 (2562)	50	366.1	193	90	DXKCAT-250	150	21
E	DLS-2506		150	366.1	293	137	DXKCAT-250	150	21
E	DLS-25012		300	366.1	443	208	DXKCAT-250	150	21
E	DLS-3002	300 (3193)	50	456.2	235	137	DXKCAT-300	195	75
E	DLS-3006		150	456.2	335	198	DXKCAT-300	195	75
E	DLS-30012		300	456.2	485	288	DXKCAT-300	195	75
E	DLS-4002	400 (3919)	50	559.9	265	200	DXKCAT-400	225	85
E	DLS-4006		150	559.9	365	275	DXKCAT-400	225	85
E	DLS-40012		300	559.9	515	390	DXKCAT-400	225	85
E	DLS-5002	500 (5118)	50	731.1	295	289	DXKCAT-500	250	91
E	DLS-5006		150	731.1	395	390	DXKCAT-500	250	91
E	DLS-50012		300	731.1	545	540	DXKCAT-500	250	91
E	DLS-6002	600 (5983)	50	854.8	310	350	DXKCAT-600	275	96
E	DLS-6006		150	854.8	410	465	DXKCAT-600	275	96
E	DLS-60012		300	854.8	560	640	DXKCAT-600	275	96
E	DLS-8002	800 (8238)	50	1176.9	355	549	DXKCAT-800	320	123
E	DLS-8006		150	1176.9	455	709	DXKCAT-800	320	123
E	DLS-80012		300	1176.9	605	950	DXKCAT-800	320	123
E	DLS-10002	1000 (10260)	50	1466.4	385	729	DXKCAT-1000	360	136
E	DLS-10006		150	1466.4	485	921	DXKCAT-1000	360	136
E	DLS-100012		300	1466.4	635	1210	DXKCAT-1000	360	136

Cyl.

Model Number	Cylinder Cap. ton(kN)	Stroke (mm)	Effective Area (cm^2)	Oil Cap. (cm^3)	Coll. Height A (mm)	Ext. Height B (mm)	Outside Diam. D (mm)	Bore Diam. E (mm)	Plunger Diam. F (mm)	Base to Advance Port H (mm)	Standard Saddle Diam. J (mm)	Saddle Protrusion from Plngr. K (mm)	Depth of plunger Hole L (mm)	Weight (kg)
DLS-502	50 (496)	50	70.9	355	128	178	125	95.0	95.0	30	71	2	15	14
DLS-504		100	70.9	709	178	278	125	95.0	95.0	30	71	2	15	18
DLS-506		150	70.9	1064	228	378	125	95.0	95.0	30	71	2	15	23
DLS-508		200	70.9	1418	278	478	125	95.0	95.0	30	71	2	15	28
DLS-5010		250	70.9	1773	327	578	125	95.0	95.0	30	71	2	15	33
DLS-5012		300	70.9	2127	378	678	125	95.0	95.0	30	71	2	15	38
DLS-1002	100 (929)	50	132.7	664	143	193	165	130.0	130.0	30	71	2	15	24
DLS-1004		100	132.7	1327	193	293	165	130.0	130.0	30	71	2	15	32
DLS-1006		150	132.7	1991	243	393	165	130.0	130.0	30	71	2	15	40
DLS-1008		200	132.7	2654	293	493	165	130.0	130.0	30	71	2	15	49
DLS-10010		250	132.7	3318	343	593	165	130.0	130.0	30	71	2	15	58
DLS-10012		300	132.7	3981	392	693	165	130.0	130.0	30	71	2	15	66
DLS-1502	150 (1390)	50	198.6	993	165	215	205	159.0	159.0	39	130	2	25	43
DLS-1504		100	198.6	1986	215	315	205	159.0	159.0	39	130	2	25	55
DLS-1506		150	198.6	2979	265	415	205	159.0	159.0	39	130	2	25	69
DLS-1508		200	198.6	3972	315	515	205	159.0	159.0	39	130	2	25	82
DLS-15010		250	198.6	4965	365	615	205	159.0	159.0	39	130	2	25	95
DLS-15012		300	198.6	5958	414	715	205	159.0	159.0	39	130	2	25	108
DLS-2002	200 (1859)	50	265.6	1330	193	243	235	183.9	183.9	50	130	2	25	66
DLS-2006		150	265.6	3989	293	443	235	183.9	183.9	50	130	2	25	101
DLS-20012		300	265.6	7977	443	743	235	183.9	183.9	50	130	2	25	154
DLS-2502	250 (2562)	50	366.1	1832	193	243	275	215.9	215.9	50	150	2	25	90
DLS-2506		150	366.1	5496	293	443	275	215.9	215.9	50	150	2	25	137
DLS-25012		300	366.1	10996	443	743	275	215.9	215.9	50	150	2	25	208
DLS-3002	300 (3193)	50	456.2	2281	235	285	310	241.0	241.0	59	139	5	25	137
DLS-3006		150	456.2	6843	335	485	310	241.0	241.0	59	139	5	25	198
DLS-30012		300	456.2	13710	485	785	310	241.0	241.0	59	139	5	25	288
DLS-4002	400 (3919)	50	559.9	2800	265	315	350	267.0	267.0	70	159	5	25	200
DLS-4006		150	559.9	8399	365	515	350	267.0	267.0	70	159	5	25	275
DLS-40012		300	559.9	16770	515	815	350	267.0	267.0	70	159	5	25	390
DLS-5002	500 (5118)	50	731.1	3656	295	345	400	305.1	305.1	80	179	5	25	289
DLS-5006		150	731.1	10967	395	545	400	305.1	305.1	80	179	5	25	390
DLS-50012		300	731.1	21900	545	845	400	305.1	305.1	80	179	5	25	540
DLS-6002	600 (5983)	50	854.8	4277	310	360	430	329.9	329.9	85	194	5	25	350
DLS-6006		150	854.8	12830	410	560	430	329.9	329.9	85	194	5	25	465
DLS-60012		300	854.8	25710	560	860	430	329.9	329.9	85	194	5	25	640
DLS-8002	800 (8238)	50	1176.9	5882	355	405	505	387.1	387.1	100	224	5	25	549
DLS-8006		150	1176.9	17645	455	605	505	387.1	387.1	100	224	5	25	709
DLS-80012		300	1176.9	35370	605	905	505	387.1	387.1	100	224	5	25	950
DLS-10002	1000 (10260)	50	1466.4	7329	385	435	560	432.1	432.1	110	249	5	25	729
DLS-10006		150	1466.4	21986	485	635	560	432.1	432.1	110	249	5	25	921
DLS-100012		300	1466.4	43950	635	935	560	432.1	432.1	110	249	5	25	1210

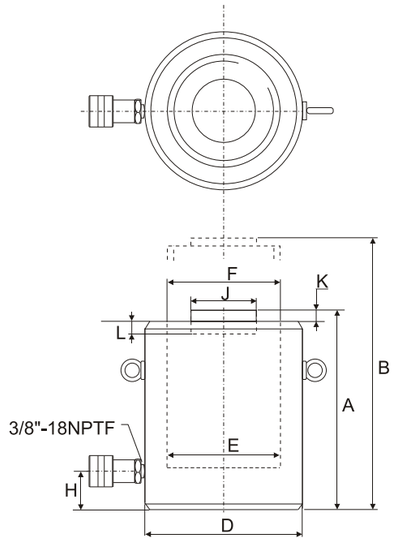

DLS-502 to DLS-25012

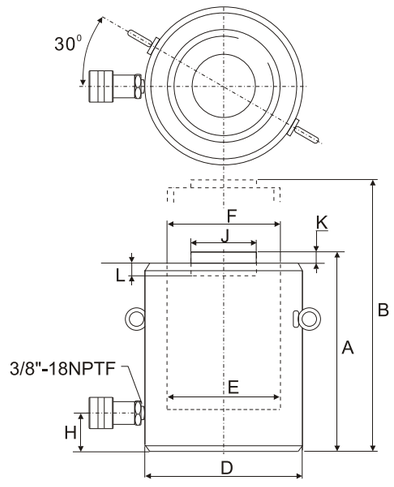

DLS-3002 to DLS-100012

Pumps

DP-392 Light Weight, Two-Speed Hand Pump

- Internal pressure relief valve for overload protection.
- Durable glass-filled nylon reservoir and nylon encapsulated aluminum pump baser for maximum corrosion resistance.
- Two speed operation reduces handle strokes by as much as 78% over single speed pumps.
- Lower handle effort to minimize operator fatigue.
- Handle lock and lightweight construction for easy carrying.
- Non-conductive fiberglass handle for operator safety.

DP-392

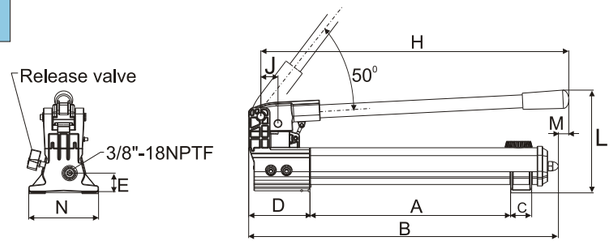

DP-392

DP-46 Steel, Two-Speed Hand Pump

- Internal pressure relief valve for overload protection.
- 4-Way valving on the DP-464 for operation of double-acting cylinder.
- Large oil capacity to power a wide range of cylinders or tools.

DP-464

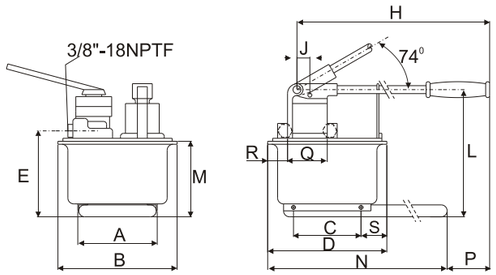

DP-462 / DP-464

Model Number	Pump Type	Usable Oil Capacity	Pressure Rating		Oil Displacement per Stroke		Max. Handle Effort	Piston Stroke	Dimensions(mm)		
			1st stage	2nd stage	1st stage	2nd stage					
		(cm^3)	(bar)		(cm^3)		(kg)	(mm)	A	B	C
DP-392	Two-Speed	901	13	700	11.26	2.47	42.2	25.4	344	533	36
DP-462		7423	14	700	126.20	4.75	50.0	38.1	210	308	163
DP-464		7423	14	700	126.20	4.75	50.0	38.1	210	308	163

Model Number	Dimensions(mm)											Weight
	D	E	H	J	L	M	N	P	Q	R	S	(kg)
DP-392	99	33	522	30	177	16	120	—	—	—	—	4.1
DP-462	320	195	671	25	270	175	650	92	—	—	80	27.7
DP-464	320	195	671	25	270	175	650	92	89	68	80	27.7

DPH Series Manual Pump

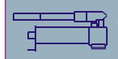

Light Weight / Steel hand pump

Reservoir Capacity:
400-7,400 cm^3

Flow at Rated Pressure:
1.25-4.75 cm^3

Maximum Operating Pressure:
700 bar

Optional Features

To add optional features to your pump, add the follow suffixes to the end of the model number.

4 ways control Valve : Model D

Example :

DPH-2000 with 4 ways control valve, order: DPH-2000D.Technical specifications for these features are available from DURAJACK.

DPH Steel Hand Pump

- Internal pressure relief valve for overload protection.
- Large oil capacity, suitable for wide application.
- Two speed auto-switch reduces manpower and increase efficiency.

Pumps

DPH-400

DPH-2000

DPH-3000

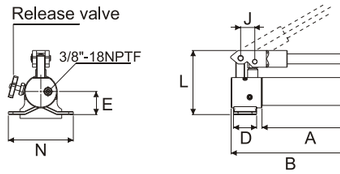

DPH-400

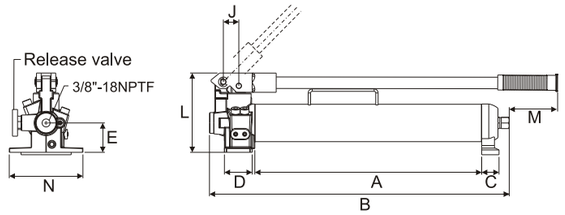

DPH -1200

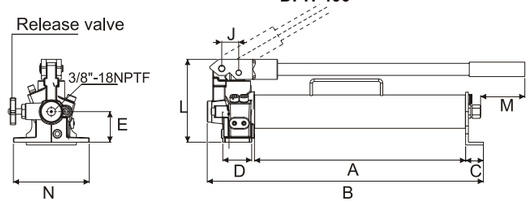

DPH-900 DPH-2000

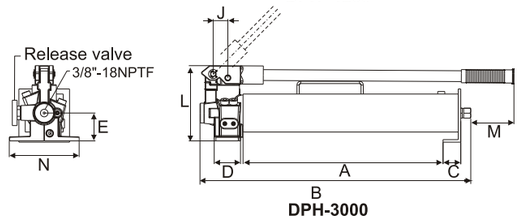

DPH-3000

Model Number	Pump Type	Usable Oil Capacity	Pressure Rating		Oil Displacement per Stroke		Piston Stroke	Dimensions(mm)									Weight (include oil)
			1st stage	2nd stage	1st stage	2nd stage											
		(cm^3)	(bar)		(cm^3)		(mm)	A	B	C	D	E	J	L	M	N	(kg)
DPH-400	S/S	400	—	700	—	1.25	22	200	296	32.0	50	50	29	142	45	140	5.0
DPH-900	Two-speed	900	14	700	12.5	2.8	21	410	510	32.5	45	55	29	150	60	136	7.5
DPH-1200		1200	14	700	12.5	2.8	19	425	536	32.5	48	55	29	150	65	137	9.0
DPH-2000		2200	14	700	14.5	2.8	21	425	536	32.5	45	55	29	150	60	136	10.5
DPH-3000		3000	14	700	14.5	2.8	21	425	562	45.0	48	55	29	150	65	137	13.6

DPHW Water/ Hydraulic Manual Pump

- Manual pump whose hydraulic fluid is "water" and can increase the pressure up to 700bar.
- Special rust-proof treatment is performed to the stainless-steel materials or special steel where the pump contacts water.
- Can be used in a place where the usage of oil is hesitated.
- A safe mechanism incorporating a safety valve like other time-tested 700 bar series.
- Automatic high-low pressure switching pump for improved work efficiency.

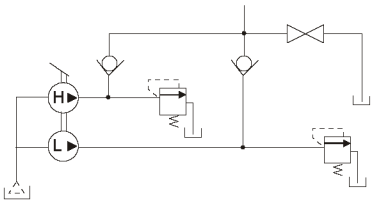

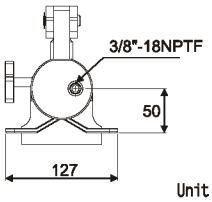

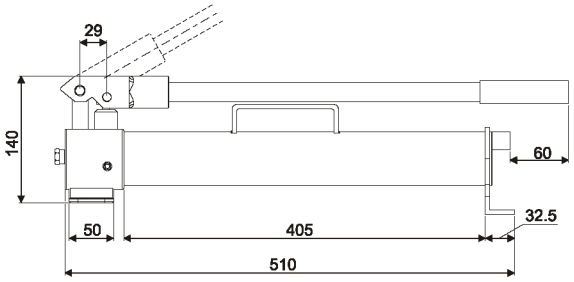

Unit (mm)

Model Number	Pressure Rating (psi)/(bar)		Output flow rate (c.c/stroke)		Water capacity	Weight (No water)
	1st stage	2nd stage	1st stage	2nd stage	(c.c)	(kg)
DPHW-900	290(20)	10,000(700)	13.0	2.3	900	5.7

DPHP Special Application Pump Head

- Adjustable linkage for reduced handle force.
- Swivel pump head for flexible fixturing.
- Wide range of operating pressures to select from.
- Design for tight mounting space, backup manual power or lower pressure and high flows.
- Design for applications when pumps oil tank need to be changed.
- DPHP and DPHH handle construct by Aluminum Alloy which dimension be φ 22 * 60 mm.

DPHP-210

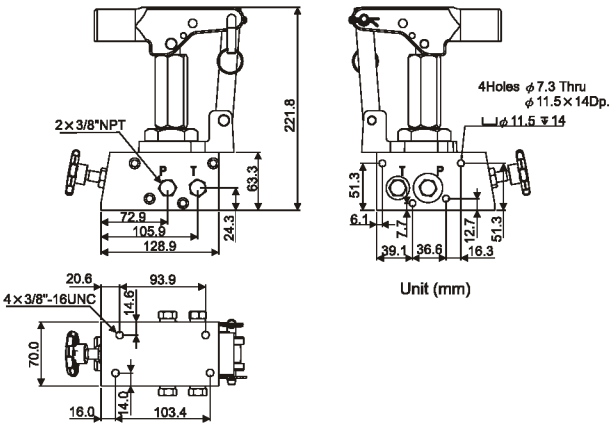

Unit (mm)

Model No.	Pressure Rating (psi)/(bar)	Volume (c.c/stroke)	Max. Handle Eff. (kgf)	Weight (kg)
DPHP-50	750(50)	75	36	5
DPHP-70	1,000(70)	35	48	5
DPHP-210	3,000(210)	22	54	4
DPHP-450	6,500(450)	9	54	4
DPHP-700	10,000(700)	5	54	4

DPHA Aluminum Hand Pump

- DURAJACK's hand pumps are always featured with their rugged construction and low handle efforts.
- All Aluminum Alloy construction and hand size release knobs that with anti-lossing mechanism are truly suitable to industrial requirement and your daily work.
- Special design with Aluminum Alloy construction as much light weight is ideally for easy portability and maneuvering.

Optional Features

To add optional features to your pump, add the follow suffixes to the end of the model number.

4 ways control Valve : Model D

Example :

DPHA-1500 with 4 ways control valve, order:DPHA-1500D.

Technical specifications for these features are available from DURAJACK.

DPHA-1500

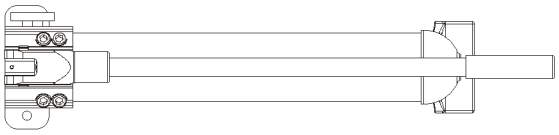

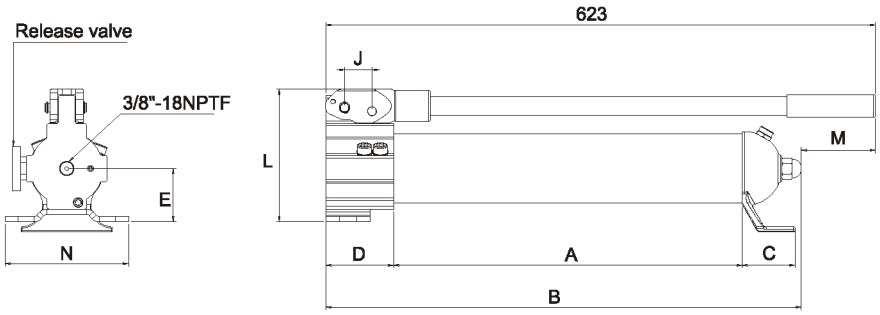

Model Number	Pump Type	Usable Oil Capacity	Pressure Rating		Oil Displacement per Stroke		Piston Stroke	Dimensions(mm)									Wt. (include oil)
			1st stage	2nd stage	1st stage	2nd stage											
		(cc)	(bar)		(cm³)		(mm)	A	B	C	D	E	J	L	M	N	(kg)
DPHA-1500	Two-Speed	1500	14	700	12.5	2.8	21	430.3	567	60	76.7	60.3	31	150.25	84	140	5.6

DPA-6 Air Hydraulic Pumps

- Internal relief valve protects circuit components, air inlet filter protects motor .
- High pressure output, light weight by aluminum alloy reservoir.
- Serviceable pump motor is not a "throw away", providing economical repair.
- Permanently vented reservoir cap.
- Three-position treadle provides cylinder advance, hold and retract operation.
- Equipped with air coupler, easy for using.
- dBA 85 at 700bar for all DPA-6 pumps, lower noise.

DPA-6

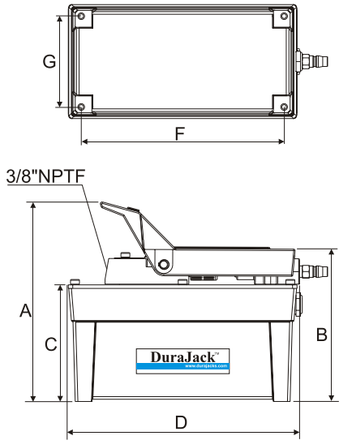

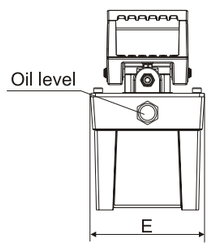

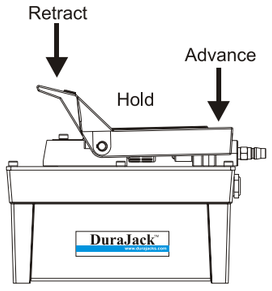

Model Number	Usable Oil Capacity	Pressure Rating		Air Pressure Range	Output Flow Rate (noload)		Dimensions(mm)							W.t (Oil)
					(L/min)		A	B	C	D	E	F	G	
	(L)	(bar)	(psi)	(kgf/cm²)	0 bar	700bar								(kg)
DPA-6	2	700	10,000	6-10	1.24	0.16	225	171	131	260	128	228	102	8.2

DPAT
Portable Air Pump

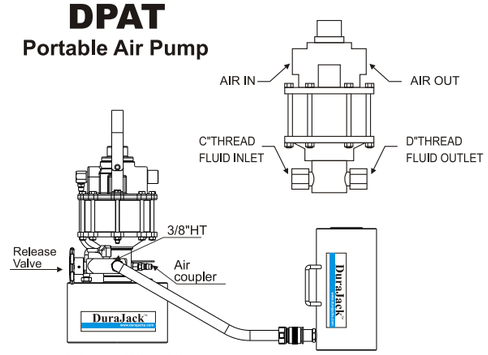

DPAT-130-700

DPAT,DPAQ&DHTP Series

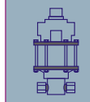

Air Pump

High Effect Air Pump

Reservoir Capacity:
2-5.6 L

Flow at rated pressure:
2.5-9.5 c.c/ per stroke

Air press:
5-7 kg/cm²

Maximum Operating Pressure:
300-700 bar

DPAQ
Frame Air Pump

DPAQ

- Steel base and frame.
- Easy to carry.

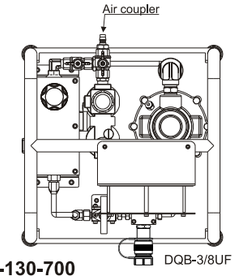

DPAQ-130-700

DHTP
Hydrostatic Pump

DHTP

- Air units (F.R.L.Unit) provide filter、regulator and lubricate.
- Input water filter which provide protect.
- Steel base.
- Liquid can be oil or water.

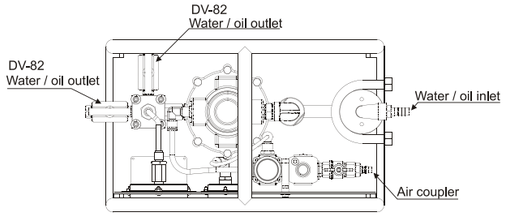

DHTP-130-300F
DHTP-130-700F

Standard type

Steel frame

Description	Model Number	Compress Ratio	Output oil	Work press.	Air press.	Equipped reservoir	Weight	Dimensions		
			(cm³/per stroke)	(bar)	(kgf/cm²)	(c.c)	(kg)	C	D	(mm)
Portable	DPAT-130-700	1:150	2.5	700	5~7	2000	9	—	1/2"PT-14	Ø220x420L
Portable	DPAT-130-700-4K	1:150	2.5	700	5~7	4000	12	—	1/2"PT-14	Ø220x530L
Steel Frame	DPAQ-130-700F	1:150	2.5	700	5~7	5600	25	1/4PT-19	9/16-18UNF	400*400*420
Steel Frame	DPAQ-180-700F	1:150	9.5	700	5~7	5600	28	1/4PT-19	9/16-18UNF	500*500*520
Standard type	DHTP-130-300L	1:60	6.4	300	5~7	—	25	1/4PT-19	9/16-18UNF	650*300*300
Steel Frame	DHTP-130-300F	1:60	6.4	300	5~7	—		1/4PT-19	9/16-18UNF	500*300*420
Steel Frame	DHTP-130-700F	1:150	2.5	700	5~7	—		1/4PT-19	9/16-18UNF	

※Reservoir will be changed by user. ※Weight and dimension will be changed by reservoir alter.

DPM Hydraulic Pullers

- Forge high strength alloy steel.
- Four stages of foldable & removable handle saves he handle force during operation.
- 360°Rotary Socket.
- Puller body is with integral safety valve and red warning line.
- Chrome plated cylinder provides linear force.
- Spring loaded live center nut for easy job(removable).
- 2/3 jaws combination puller cross head with manganous-phosphate plated for rust proof and durability.
- Heat treated forged alloy steel cross bolt & jaws with manganous-phosphate plated for rust proof and long life service.
- Extend plunger easy to work.
- Material lifetime warranty.
- 120% capacity for jaws.
- All model equipment with protective net and box.

DPM-1200

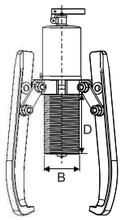

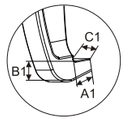

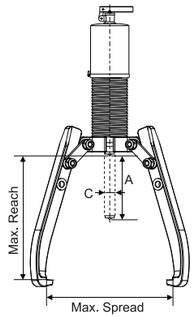

Extend plunger

Stock box

Red warning line

Protective net

Model No.	Cap.	Stroke	Eff. Area	Reach	Spread	Tip (mm)			Jaw Tip (mm)			Weight
	(ton)	A(mm)	(cm^2)	(mm)	(mm)	B	C	D	A1	B1	C1	(kg)
DPM-600	6	70	8.04	245	330	45	23	91	13	10	22	6.1
DPM-800	8	85	11.34	230	350	55	26	112	11	10	25	8.4
DPM-1200	12	85	14.45	260	375	60	28	118	14	10	29	10.5
DPM-2000	20	111	28.26	350	520	80	40	162	20	27	33	24.5
DPM-3000	30	111	42.00	435	550	98	50	155	20	27	38	37.3

DPR Hydraulic Pullers

- Forge high strength alloy steel.
- Self-contained hydraulic pump and puller body with integral safety valve and red warning line.
- Chrome plated cylinder rod provides linear force.
- Spring loaded live centering nut for easy job (removable).
- 2/3 jaws combination puller cross head with manganous-pohosphate plated for rust Proof and durability.
- Heat treated forged alloy steel cross bolts and jaws with manganous-phosphate plated for rust proof and long life service.
- Design of two stages stroking, the first stage being as fast stroking for quickly connecting with object ,and the second stage being as high hydraulic output for pulling job.
- Extend plunger easy to work.
- Material lifetime warranty.
- 120% capacity for jaws.
- All model equipment with protective net and box.

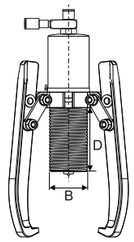

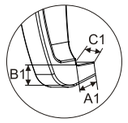

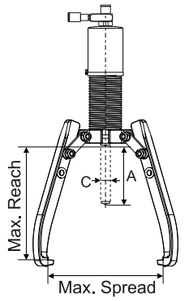

Model No.	Cap.	Stroke	Eff. Area	Reach	Spread	Tip			Jaw Tip (mm)			Weight
	(ton)	A(mm)	(cm^2)	(mm)	(mm)	B	C	D	A1	B1	C1	(kg)
DPR-600	6	70	8.04	245	330	45	23	91	13	10	22	5.4
DPR-800	8	85	11.34	230	350	55	26	112	11	10	25	7.4
DPR-1200	12	85	14.45	260	375	60	28	118	14	10	29	9.5
DPR-2000	20	111	28.26	350	520	80	40	162	20	27	33	23.0
DPR-3000	30	111	42.00	435	550	98	50	155	20	27	38	35.3

Puller

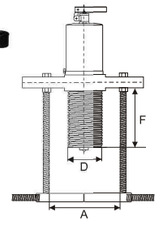

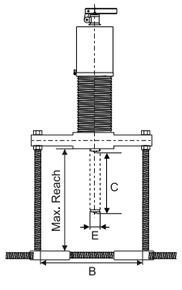

Model No.	Cap.	Stroke	Reach	Spread (mm)		Tip (mm)			Wt.
	(ton)	(mm)	(mm)	A	B	D	E	F	(kg)
DPM-610	6	70	270	95	180	45	23	92	7.3
DPM-810	8	85	270	95	220	50	25	122	12.9
DPM-1210	12	85	381	120	290	60	28	118	21.9

Suitable bear attachments

DBA Universal Bearing Attachments

- Forged of high strength steel alloy.
- Heat treated, Chrome plated for rust proof and durable life.

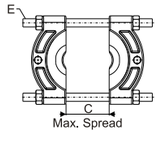

Model No.	Spread (mm)	Bolt (mm)	Wt.
	C	E	(kg)
DBA-9000	30-50	3/8"-24T-L120mm	0.6
DBA-9005	50-75	1/2"-20T-L135mm	1.5
DBA-9015	75-105	5/8"-18T-L165mm	2.5
DBA-9025	105-150	3/4"-16T-L275mm	5.2
DBA-9035	150-200	1"-12T-L350mm	10.6

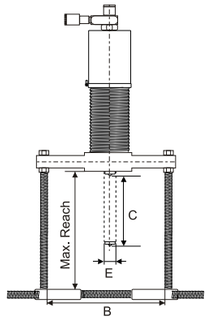

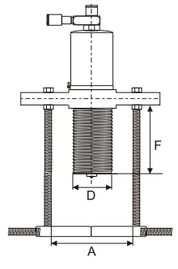

Model No.	Cap.	Stroke	Reach	Spread (mm)		Tip (mm)			Wt.
	(ton)	(mm)	(mm)	A	B	D	E	F	(kg)
DPR-810	8	85	270	95	220	50	25	122	11.9
DPR-1210	12	85	381	120	290	60	28	118	20.9

Suitable bear attachments

DBA

Universal Bearing Attachments

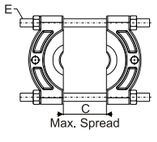

Model No.	Spread (mm)	Bolt (mm)	Wt.
	C	E	(kg)
DBA-9000	30-50	3/8"-24T-L120mm	0.6
DBA-9005	50-75	1/2"-20T-L135mm	1.5
DBA-9015	75-105	5/8"-18T-L165mm	2.5
DBA-9025	105-150	3/4"-16T-L275mm	5.2
DBA-9035	150-200	1"-12T-L350mm	10.6

Puller